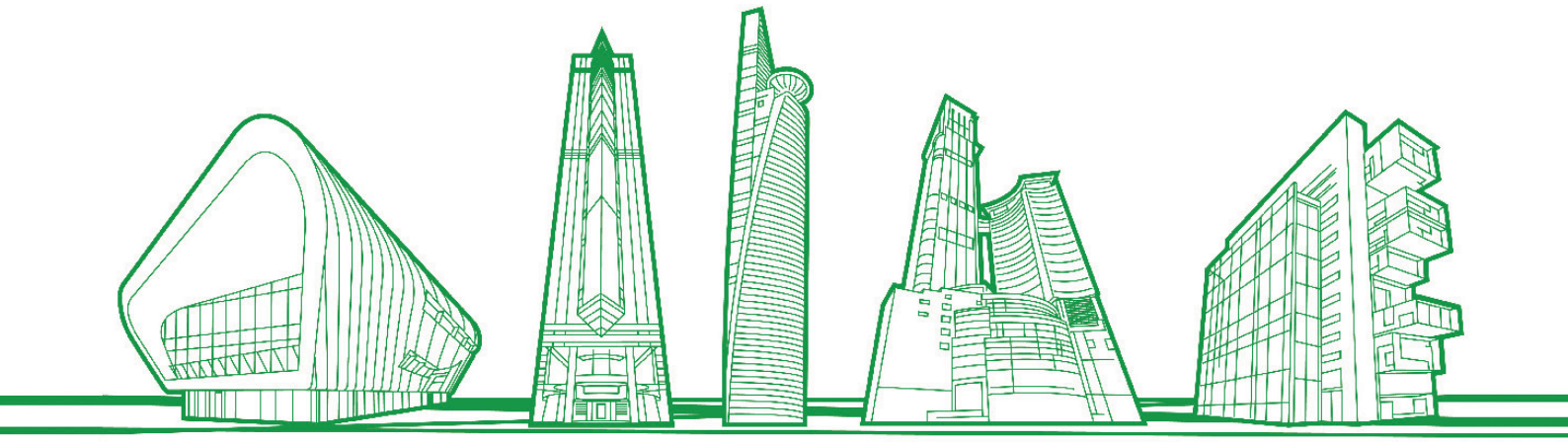

FLEXMATIC E
USER GUIDE

VERSION 2.0
JULY 2015

AET Manufacturing Ltd, Unit 2707, The Center, 99 Queen's Road Central, Hong Kong
UK office +44 (0)1342 310400 / Hong Kong office +852 2575 218 / aet@flexiblespace.com
flexiblespace.com

AET Flexible Space
Under Floor Air Conditioning

Table of Contents

Section One - General 2

1.0 General 2

Section Two - Hardware 3

2.0 Flexface Evolution 24V AC 3

2.1 Flexface Evolution 24V AC 3

2.2 Networking between Units 4

2.3 Eprom / Flash memory 6

2.4 Humitemp and Humitemp Evolution 7

2.5 PTC Temperature Sensor 8

2.6 PTC Airflow Sensor / Differential pressure switch 8

2.7 Board / TAM Module 9

2.8 Power Supply Module for Flexmatic E 13

2.9 Flexbus Cables and other Connection Cables 15

2.10 Hardware, Technical Specification 17

2.11 Spare Parts List 18

Section Three - Software 19

3.0 Flexmatic E Layout 19

3.1 Meaning of the Symbols in the Main Window 20

3.2 Flexmatic Parameter List 42

3.3 Messages / Warnings / Alarms 48

Section Four - Connections 50

4.0 Connection Guide 50

Section One - General

1.0 General

This user manual describes the Flexface E control system for AET Flexible Space Under Floor Air Conditioning (UFAC) system. It contains information concerning the architecture of the control systems as well as the settings required to obtain the desired behaviour of the unit.

The Flexface control system will effectively manage all the different functions of the CAM range of units, depending on the Eprom program (Eprom explanation see: Chapter 2.3 Eprom). In the following sections, the hardware and later, the software (firmware) are explained in detail.

Section Two - Hardware

2.0 Flexface Evolution 24V AC

The Flexface Evolution is a microprocessor-based electronic card, which is able to manage the devices and the sensors installed in the CAM. The Flexface E is installed in the electrical panel of each CAM.

NB: To access / set timer & some other functions, a visual display Flexmatic E is required.

2.1 Flexface Evolution 24V AC

As the Flexface E is the “Heart” of the System which controls all functions of the unit, some jumpers have to be set in order to tailor the control board. Most of these jumpers are already correctly set in the factory; only the jumper for the unit’s address (“A”) has to be set in the field, during start-up of the unit.

Never add / remove jumpers when Flexface is under power

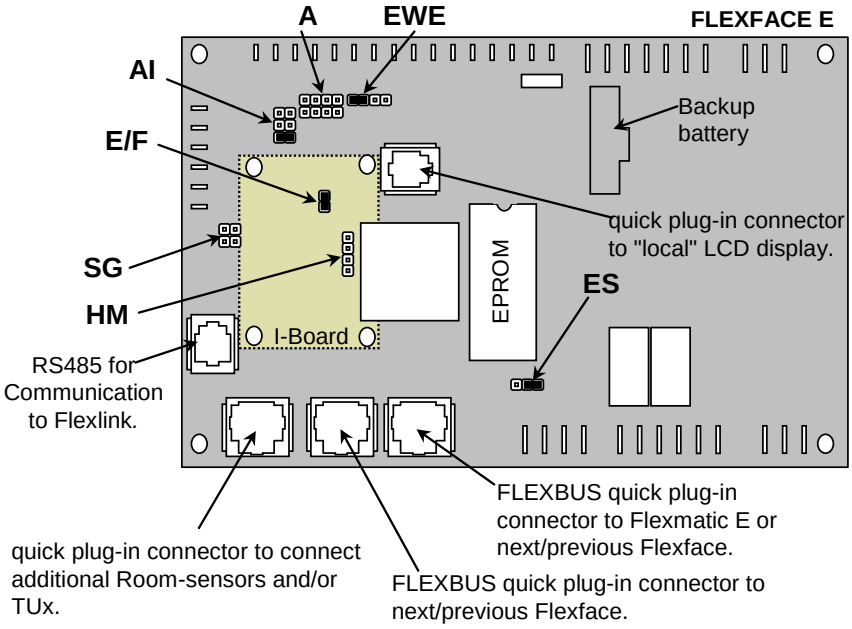

JUMPERS:

EWE:	EPROM write enable. Always set this jumper.
A:	Address setting. See chapter “Networking” for Details. Units, not connected to others: NO Jumper.
AI:	Analogue Inputs selection. Set indicated jumper only if “PTC Airflow” is used. Do not set any jumper if differential pressure sensor is used for airflow detection.
E/F:	EPROM / Flash memory selection jumper. Set the jumper when EPROM is installed. Do not set this jumper when Flash memory is installed.
SG:	Subgroup ID setting. Do not set these Jumpers.
HM:	Comb connector for I-Module (present when humidifier is installed).
ES:	EPROM /Flash memory size selection jumper. Set jumper between middle and right pins for 1 or 2 Mbit size memory devices. Set jumper between middle and left pins for 4 Mbit size memory devices.

Figure 1

2.2 Networking between Units

2.2.1 How to connect the Flexfaces

Up to 16 units may be connected together via Flexbus, to be finally connected to one or more Flexmatic E. The Flexmatic E offers easy access to all unit's data, as well as other features like graphic data records, timer settings etc.

Please note that a poor connection could cause serious problems to the electronic devices (Flexface and Flexmatic); for this reason we strongly recommend you to use only first quality products or to buy the cables directly from your FSS supplier. Before connecting the cables to the Flexface, check with a cable-tester, (see Spare Parts List, Section Two, 2.11).

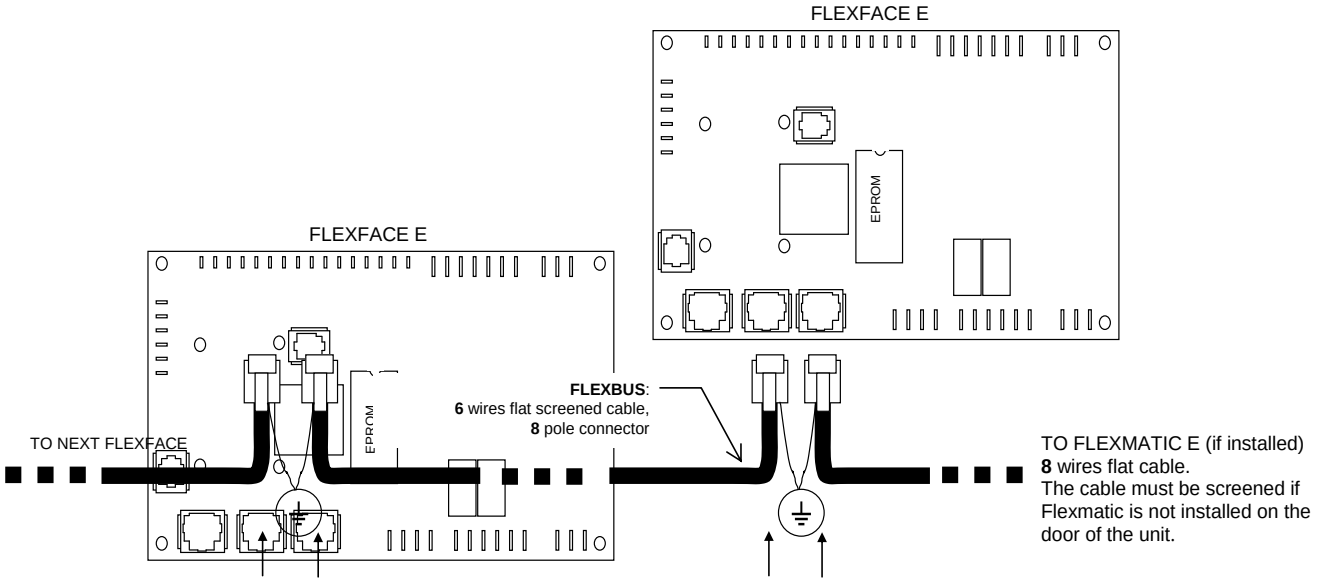

NOTE: CONNECT THE SCREEN OF THE FLAT CABLE TO THE CLOSEST "PE" (EARTH) OF THE EL. PANEL ON BOTH ENDS OF THE CABLE. FLEXBUS CABLES MUST BE INSTALLED SUITABLY SEGREGATED FROM POWER TRANSMISSION CABLES.

Figure 2 - connecting Flexfaces.

The bus-cable must be wired from 1st unit to the 2nd, from 2nd to the 3rd etc. "Star" or " Ring" connections are not allowed. The maximum length of the Flexbus-cable is 300 metres, counting all connection cables together. The single distances are not significant, as long as the total length of all cables together doesn't exceed 300 metres.

2.2.2 Typical network with Flexfaces, Terminal Units and external sensors

Note: Length of Flexbus, connecting the Flexfaces, must not exceed **300 metres** in total. Length of Flexbus, connecting the Sensors and the TUx, must not exceed **300 metres** in total.

Note: Sensors must be connected first to the Flexface (max. distance 25 metres to the Flexface), with TUx "after" the sensors, using "T" connectors.

All Bus-cables, going out from the CAM-C / CAM-V unit **must be screened and earthed**.

In total **24 Master TUx** are addressable. Including Slave TUx, the number must not exceed **32 TUx** in total, connected to one Flexface.

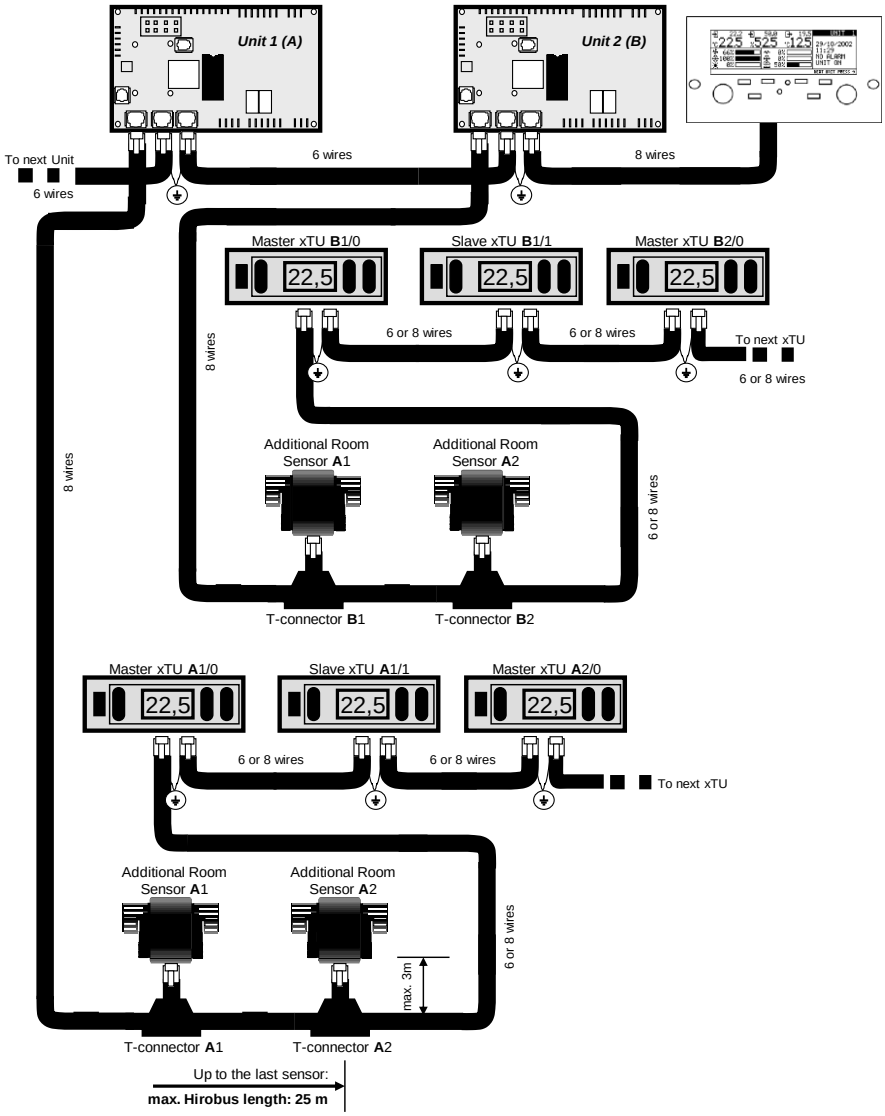

Figure 3 - Network with Flexfaces and TUx

2.3 Eprom / Flash memory

The Eprom / flash is the device which stores the program the Flexface or Flexmatic E that has to work with. It doesn't store any user-settings - this is done by the device itself (in the RAM and the Eprom). The version name and the number are printed on the Eprom / flash label. The following Eproms / flashes are currently used for AET Flexible Space units (the xxx is a placeholder for the actual version):

HVM Eprom.....

Bit 1.00.xxx.....For Flexface E 24V AC

HVE 1.00.xxx Flash, 4 MBit, For Flexmatic E.

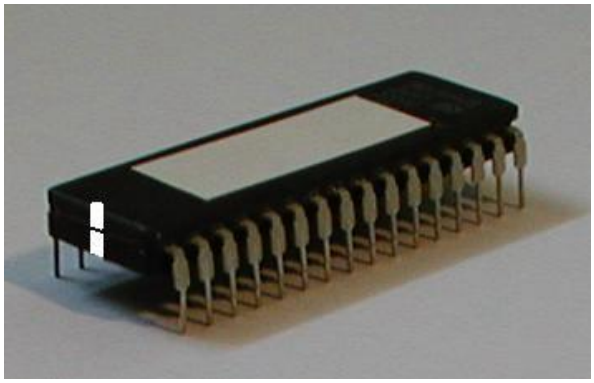

Figure 4 – Eprom (top) and Eprom Remover Tool

Power-off the device before mounting/dismounting the Eprom. Remove Eprom only with a special tool; never use a screwdriver. For correct installation direction, please refer to section 2.1 and Section 2.7.2 Flexmatic connection.

2.4 Humitemp and Humitemp Evolution

The Humitemp is a combined Temperature / Humidity Sensor. If connected, the Flexface will use the values of the Humitemp for control according the sensor priority settings. It is connected to the Flexface through Flexbus-Cable (max. length: 25 m). 2 sensors can be connected to one Flexface (= to one air handling unit).

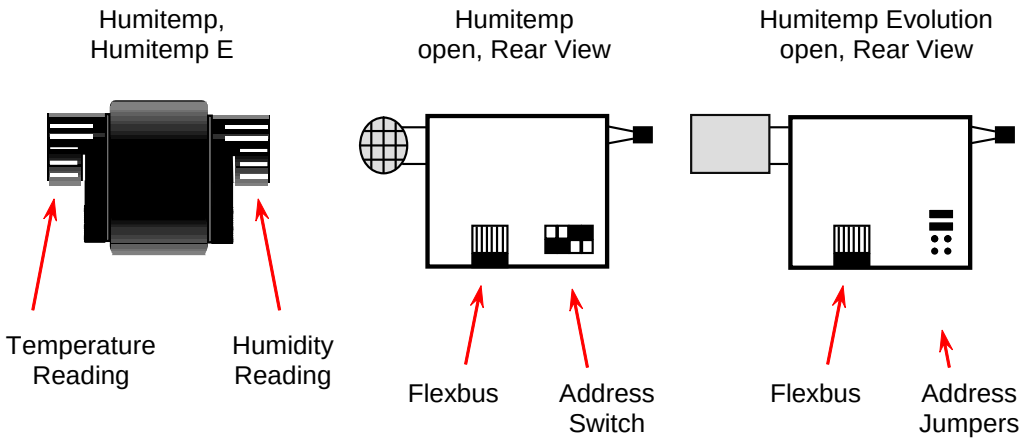

Figure 5 – Humitemp

The Address-Switches / jumpers inside the Humitemp allow the following setting;

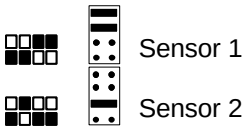

Figure 6 – Address switches / jumpers

2.5 PTC Temperature Sensor

The PTC Sensors are used to read return air and supply air temperatures as well as outdoor temperature. There are different types available: please refer to Spare Parts List, Section Two, 2.11.

PTC Sensors are temperature-sensors, changing the resistance according to the temperature (positive temperature coefficient). The connection is 2 poles. The max cable length is 10 metres.

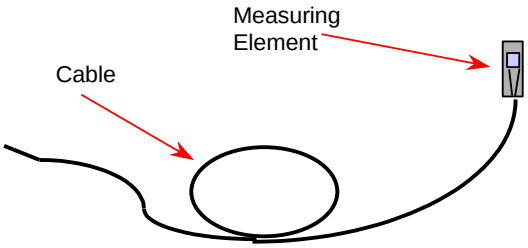

Figure 7 – PTC Sensor

2.6 PTC Airflow Sensor / Differential pressure switch

The PTC Airflow Sensor measures airspeed in the same way as the one used for Anemometers. There is an automated setup-procedure in the software to assist in setting-up. The PTC Airflow is supplied with 24V, and gives back a signal of 0-10V DC, according the airspeed measured. It must be connected to an analogue input. The connection is 3 poles. The length of the cable for the sensor is 2 metres. The adjustment is done by software. **Note**: depending on the unit's configuration, a differential pressure switch could be an alternative. It would need mechanical adjustment.

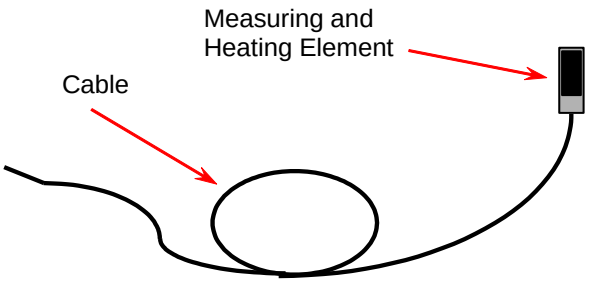

Figure 8 – PTC Airflow **Figure 9 – Differential pressure switch**

2.7 Board / TAM Module

The I-Board for CAM-C / CAM-V Units is the current transformer for the humidifier (cylinder type). The I-Board consists of one current transformer-coil (one phase of the power supply for the humidifier must be wired through the hole); and 1 output relay (to start humidifier, The I-Board is simply plugged onto the Flexface. Please refer to Section 2.1, for the position.

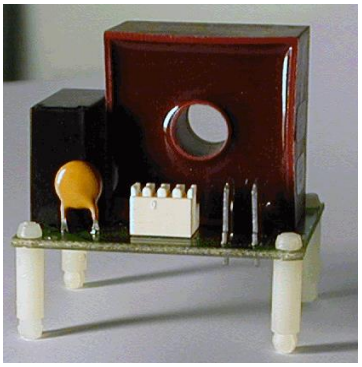

Figure 10 - I-Board

2.7.1 Flexmatic E

Flexmatic E is a microprocessor-based electronic device, which makes it possible to visualise and control the functions of one or more Flexface devices up to a maximum of 16. Flexmatic E offers numerous advantages in programming the units as well as optimising their operation; see Section 3.0.

2.7.2 Flexmatic E direct Connection to Flexface

Flexmatic E can be fixed on the front panel of the unit. Connect the FLEXBUS cable as shown in Figure 11.

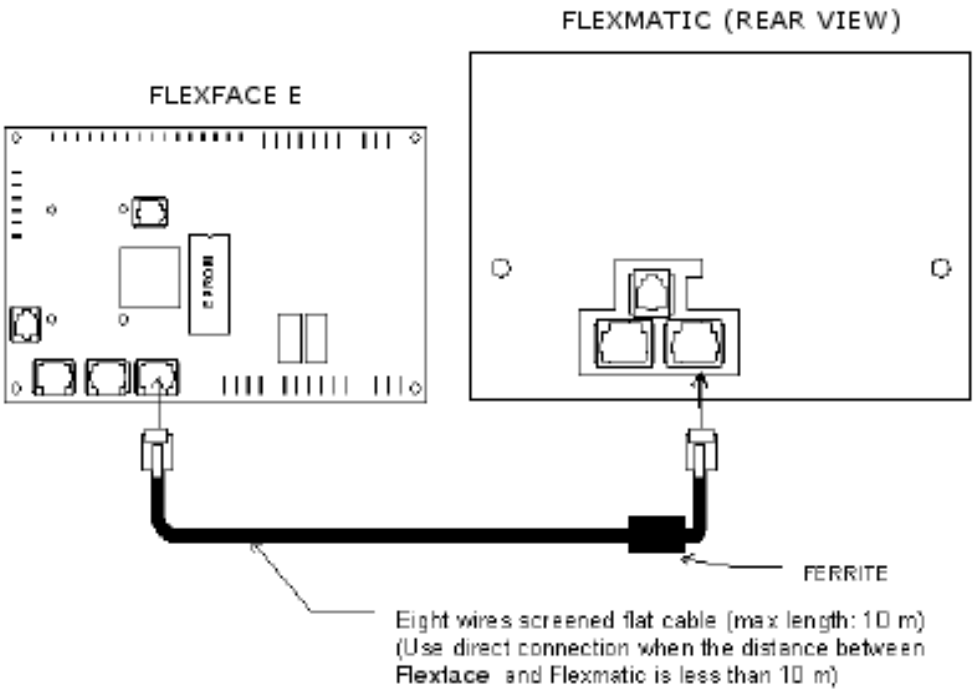

Figure 11 - Direct connection between Flexface and Flexmatic E

2.7.3 How to connect more than one Flexmatic to the network

More than one Flexmatic E may be connected to a network. All Flexmatics will show the same values (as they are reading out the data from the Flexfaces), changes of parameters can be set from any Flexmatic – the last set of information sent to the Flexfaces through a Flexmatic is valid. The only limitation (despite of the total Flexbus cable length of max. 300 metres) is the power supply of the Flexmatics: 1 Flexface can supply 1 only Flexmatic E. If more Flexmatics are connected, PSM modules (see page 13, 2.8.1)

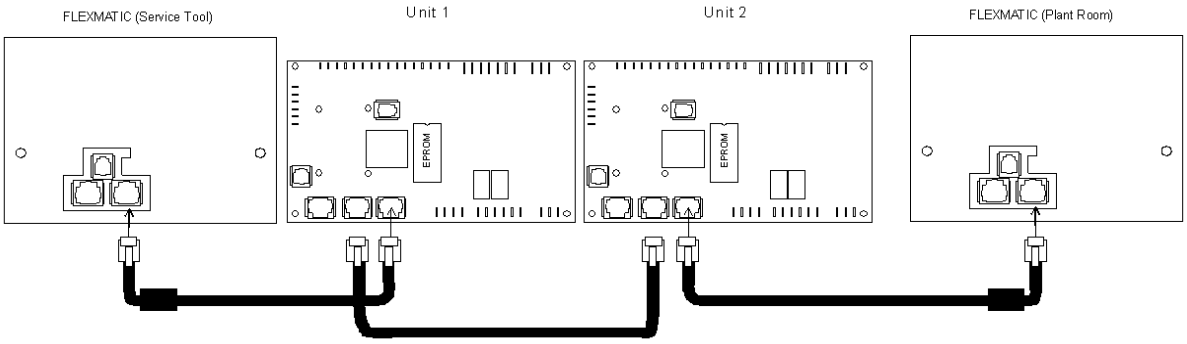

Figure 12 - Example how to connect two Flexmatic Es to the network

2.7.4 Flexmatic Evolution Rear View, Jumpers and Eprom Position

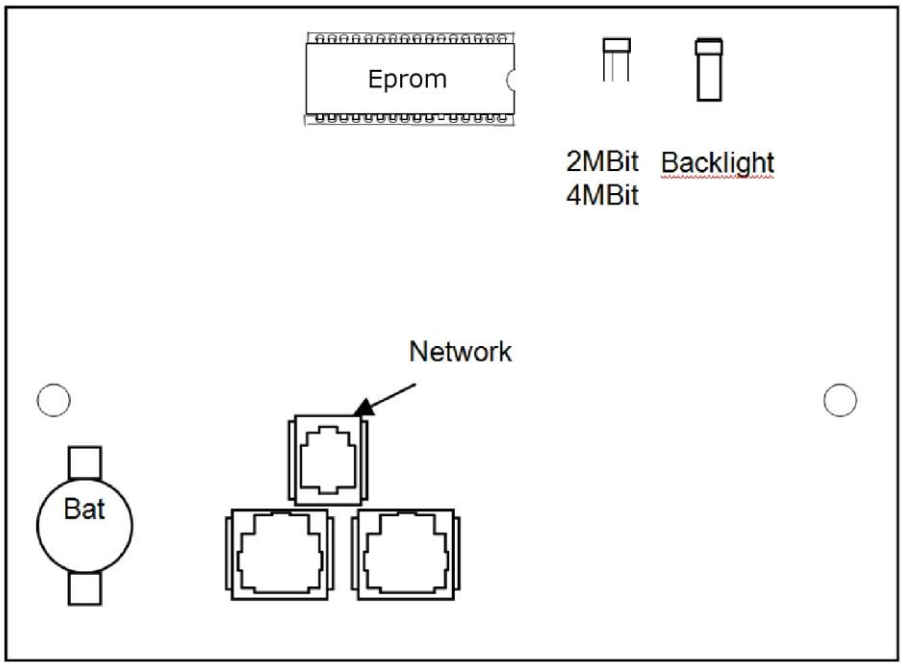

Figure 13 - Flexmatic Evolution Rear

Description of the jumpers:

Eprom (2M) / Flash Size (4M): Middle + Upper Jumper: 2 or 4 MBit (std. setting) Middle + Lower Jumper: not used.

Please take special care regarding the jumpers when installing a replacement Flexmatic.

2.8 Power Supply Module for Flexmatic E

2.8.1 PSM Hardware

Flexmatic E may be supplied mounted in an independent electrical panel containing a power supply module as well (PSM Power Supply Module) if the distance to the next Flexface is more than 10 metres. The PSM Module itself needs a power of 24V AC / 30 VA.

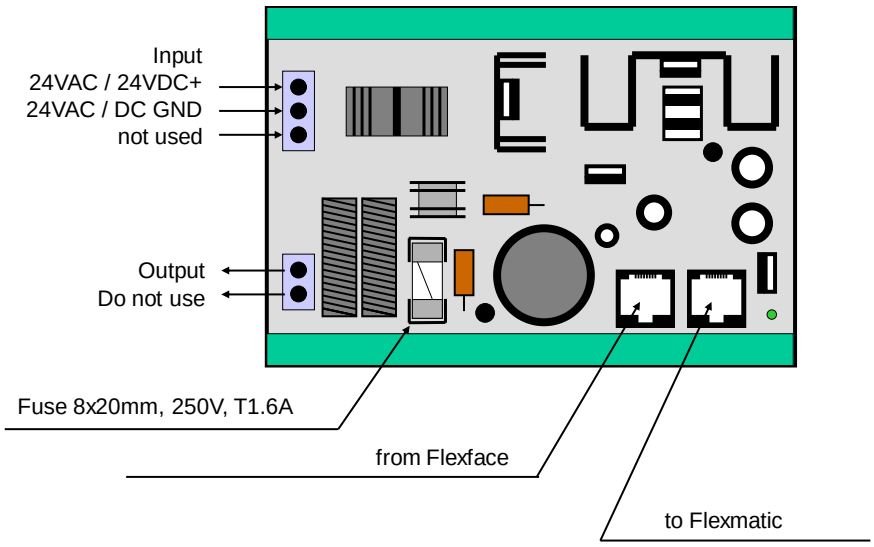

Figure 14 - PSM Module

2.8.2 PSM Connection

The connection between Flexmatic E and the PSM is carried out in the factory by means of an eight wire Flexbus cable. The PSM should be connected to Flexface through a six wire, screened Flexbus cable; the screen needs to be earthed in both terminals. When the system consists of more than one CAM unit, a Flexmatic can be connected to any unit where Flexface has a free Flexbus connector (usually either the first or the last one of the Flexface chain).

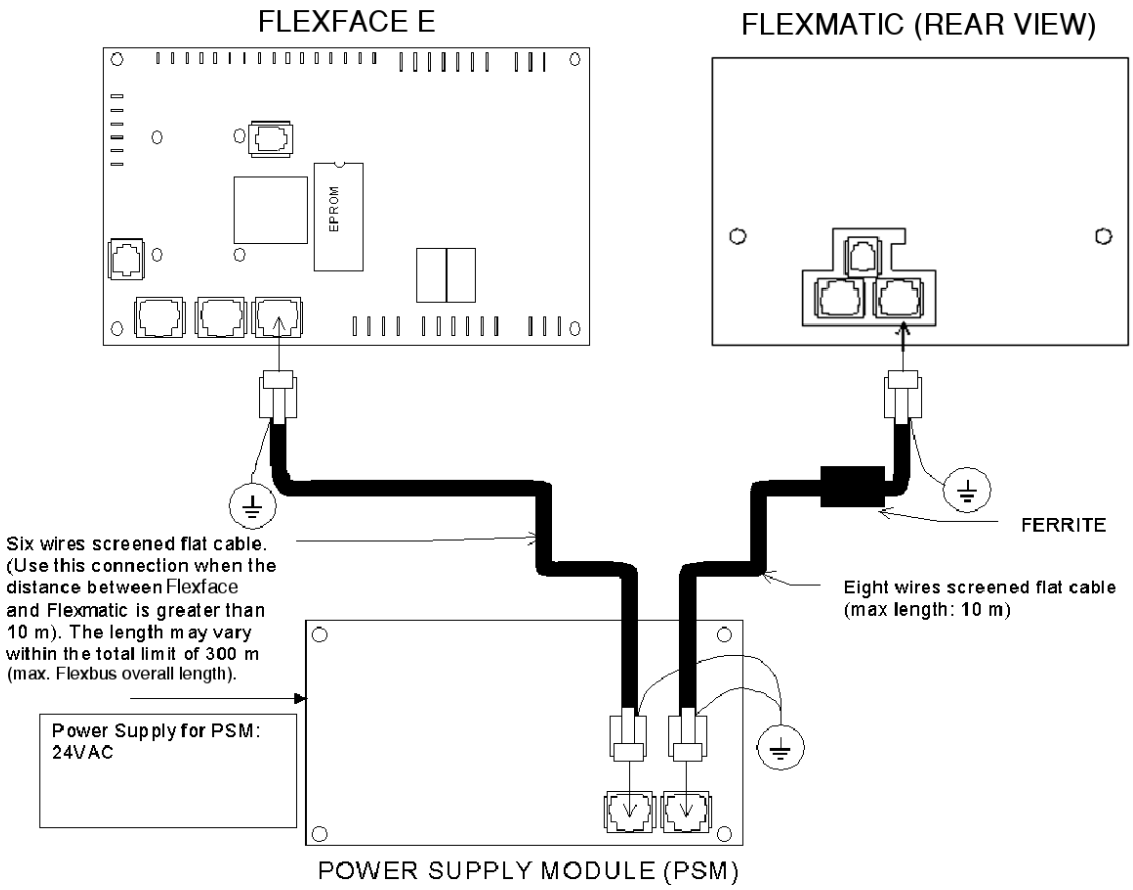

Figure 15 - Connection of Flexface LAN to Flexmatic E with PSM.

2.9 Flexbus Cables and other Connection Cables

The connections between various Flexfaces, Flexmatic display and sensors are carried out with cables having a different number of wires and different connectors. To see how these cables have to be configured, see below. For the type of cable and connectors refer to the Spare Parts List included in this manual.

Please note that a poor connection could cause serious problems to the electronic devices (Flexface and Flexmatic); for this reason we strongly recommend you to use only first quality products or to buy the cables directly from your AET Flexible Space supplier. Before connecting the cables to the Flexface, check with a cable-tester (see Spare Parts List, Section 2.11)

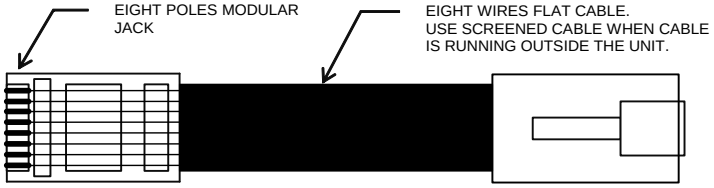

Figure 16 - Eight-wire; eight pole connector Flexbus cable for Flexmatic, Humitemp and TUx connections

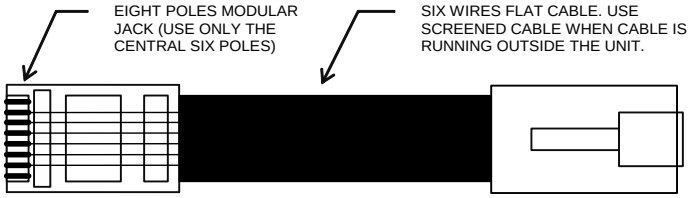

Figure 17 - Six-wire (Pin 1 and 8 not connected) Flexbus cable, for Flexface to Flexface connections, eight pole connectors. This cable must be screened

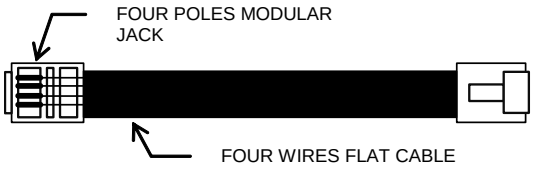

Figure 18 - Four wire flat cable for local LCD Display, four pole connectors

2.9.1 Addressing

When Flexfaces are connected by Flexbus cables, it is necessary to assign a different address to each of them by means of a group of jumpers on the Flexface. The jumper position is described in

The units must be addressed consecutively, starting from #1. The bus-cable doesn't necessarily need to go in order of the addresses; it could also be wired 1-5-4-2-3, for example.

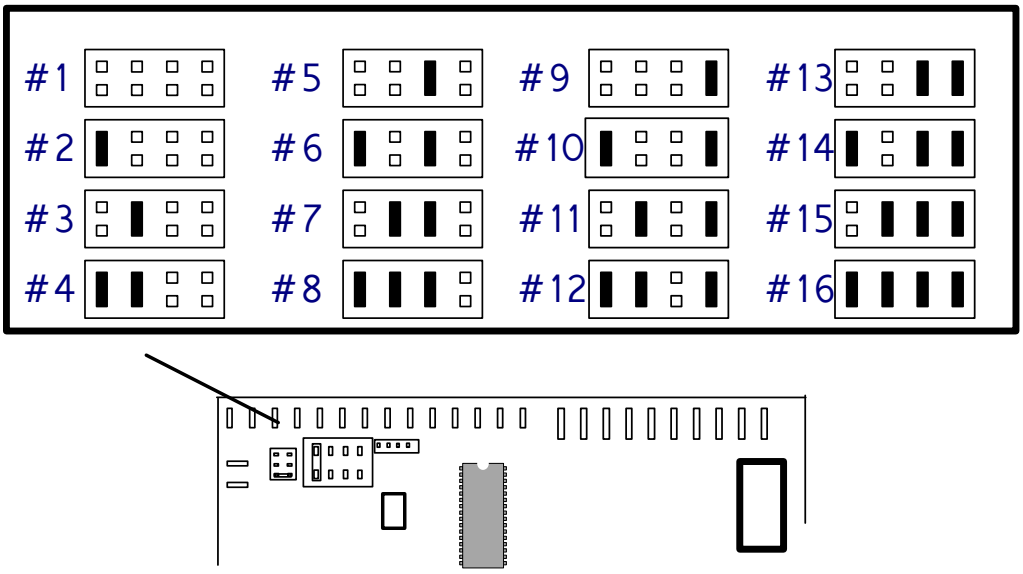

Figure 19 - Address jumpers

2.10 Hardware, Technical Specification

Flexface E 24V AC	
Power Supply	24VAC, ± 10%; 50 Hz
Digital Out (Triac)	7
Digital Out (Relay)	2 (max. 24V – 1A)
Analogue Out (0-10V)	2
Analogue In (resistive)	8
Analogue In (resistive / 0-10VDC)	3
Storage Temperature	-10 (not condensing) to +65°C
Operating Temperature Range	0 (not condensing) to +55°C
Humitemp	
Power Supply	10VDC (from Flexbus)
Temperature range	0 to 50°C
Humidity range	20 to 90%
Minimum airspeed required	0,5 m/s
Temperature precision	± 0,5°C
Humidity precision (@25°C)	40 to 65%: ±2 %r.H. 20 to 90%: ±4 %r.H.
PTC Temperature sensor	
Cable length	10m
Temperature range	-28 to 100°C
Point of calibration	2000Ω at 25.0°C
Flexmatic E	
Power Supply	10VDC (from Flexbus)
Graphic Display	Backlit, 200 x 64 pixels
Mounting hole	175 x 150mm
Power Supply Module (PSM)	
Power supply	24VAC, ± 10%; 24VDC, ± 20%
Output	10VDC (Flexbus, stabilised); 24VAC, ± 10%; 24VDC, ± 20% (filtered)
I-Board (Current transformer)	
Current Range	0 – 30A
Digital Out (Relay)	1 (max. 24V – 1A)

2.11 Spare Parts List

DESCRIPTION	CODE
Flexface E user manual FSS	021 076
Flexface E (Evolution) 24 AC board	275 29701
I-Board / TAM Module	275 099
Alarm Board 24VAC	275 148
Heaters Board	275 366
Probe PTC 2 kohm L = 10 m (outdoor temperature)	275 155
Probe PTC 2 kohm L = 10 m (supply temperature)	275 262
Probe PTC 2 kohm L = 10 m (return temperature)	275 263
Probe Temp. + Hum. Humitemp	275 181
Probe airflow PTC	275 184
EPROM Flexface HVM 100***	275 877
FLASH Flexmatic HVE L1 100*** (Language Pack 1: English, German, Italian, Polish, Spanish)	275 876
FLASH Flexmatic HVE L2 100*** (Language Pack 2: English, Portuguese, Swedish, French))	276 230
Flexmatic Evolution Classic	275 69102
Kit Liquistat	482 979
LWD (Leakage Water Detector)	275 353
Flat cable 8 way M-M L = 1 m	275 607
Flat cable 8 way M-M L = 10 m	275 610
Flat cable 6 way screened (specify length)	275 625
Flat cable 8 way screened (specify length)	275 626
Module PSM 24/24-10 for Flexmatic	275 316
"T" adapter for Flexbus	275 652
Spacer Set for Flexface Board 4#	035 107
Digital Expansion Board	275 365
Flexbus / Flexnet Cable Tester	480 061
Flexbus / Flexnet Interface Tester	480 060
Flexmatic cable with Ferrite	XXXX

Section Three - Software

3.0 Flexmatic E Layout

The front panel of Flexmatic E for CAM-C / CAM-V units consists of a backlit graphic LCD, with eight push buttons that permit input function and two LEDs.

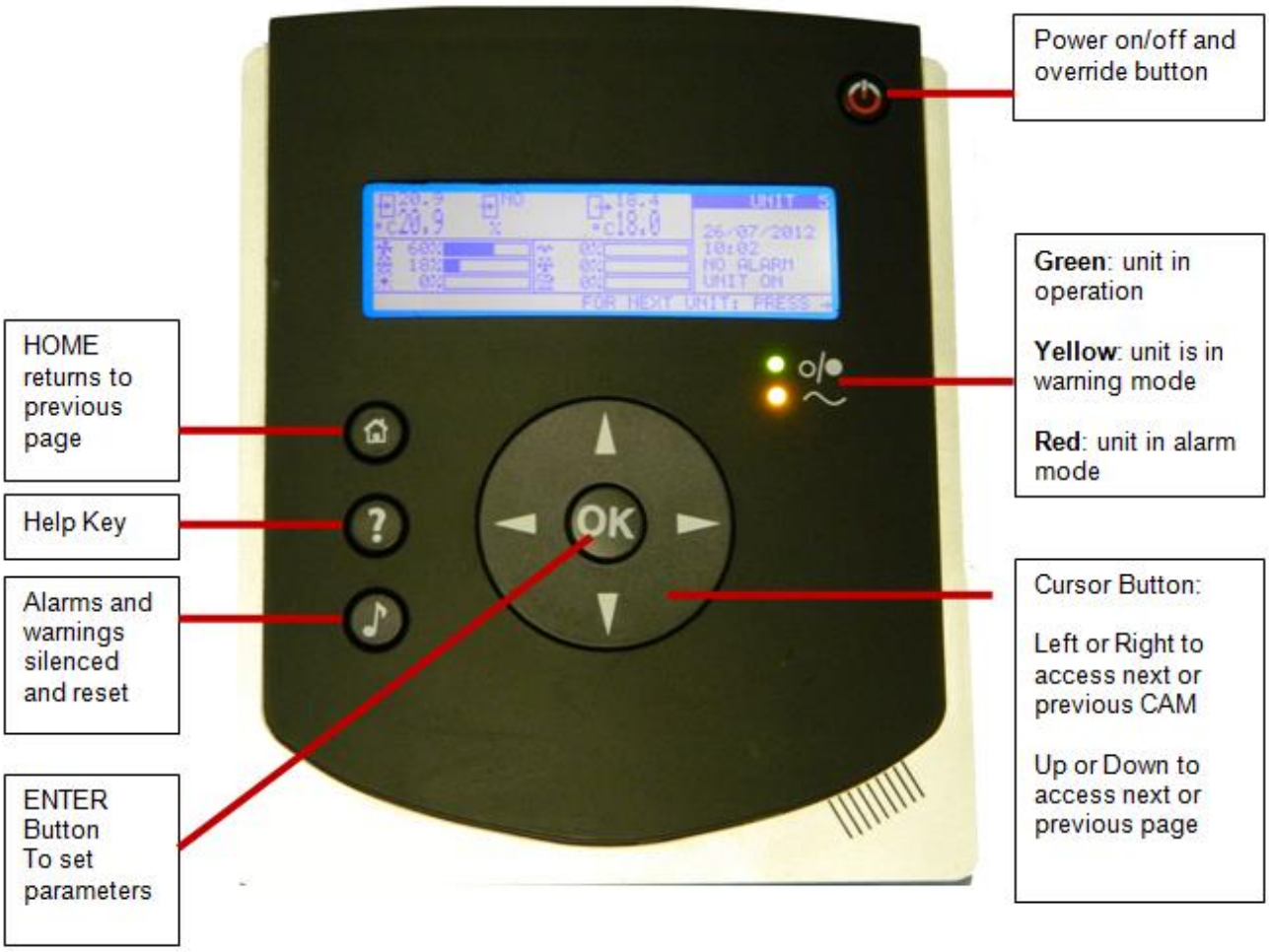

Figure 20 - Flexmatic E Front View

3.1 Meaning of the Symbols in the Main Window

22.2
°C 22.5

Return Air Temperature, composed according the "Sensor Priority" settings. The priority percentage of the sensors (return air sensor, two additional room and TUx temperatures) may be set as required. The large number indicates the Room Temperarure. The small number above the read value indicates the derived zone setpoint (read only). This setpoint (=actual zone setpoint) is the calculated average from all TUx which are not set as "ignored". The control opens / closes the valve(s) according this value compared with the return air temperature reading.

50.0
% 52.5

Return Air Humidity. The value is read from the two additional room sensors (Humitemp) composed according the "Sensor Priority" settings.
The small number above the read value indicates the actual humidity setpoint (read only). If the humidity compensation is enabled, the actual humidity setpoint is recalculated according to the temperature deviation: every 1°C of temperature deviation from the humidity setpoint is modified by 3%rH. It will be increased by this number if the return air temperature is lower than the actual setpoint and will be decreased by this number if the return air temperature is higher than the actual setpoint.

19.5
°C 12.5

Supply Air Temperature. The large number indicates the actual Supply Air Temperature. The small number above the read value indicates the derived setpoint (read only). The supply setpoint is calculated from the deviation of the return air temperature from its setpoint, multiplied by the supply compensation factor.

66% ..... This graph shows the fanspeed of the CAM-C/CAM-V unit.

100% ..... This graph shows the actual status of the chilled water valve.

0% This graph gives information about the actual status of the water valve.

0% This graph gives information about the actual status of the electrical heaters. Usually 3 steps are used: 33 / 66 / 100%.

0% This graph gives information about the actual dehumidification stages in operation.

0% This graph gives information about the actual humidification output.

UNIT 1
29/06/1998
11:29
REM OFF
NO ALARM

This field of the window shows time, date and status of the unit.

Status indicated	Status Type	Description	Command to TU	Override possible
ALARM OFF	Off	the Unit has an Alarm, and is stopped because of the Alarm	Off	No
REM OFF	Off	the Unit is stopped by Remote On/Off Input	Off	Yes
TIMER OFF	Off	the Unit is in Timer Mode	Off	Yes
SYS OFF	Off	Unit is stopped by Flexmatic button	Off	Yes
BMS OFF	Off	Unit stopped from BMS	Off	Yes
RECOVERY	On	Through User Input or BMS	Off	No
ALARM ON	On	the Unit has an Alarm, but is working	On	-
MANUAL	On	the Unit is in Manual Mode.	On	No
TIMER ON	On	the Unit is in Timer Mode	On	-
OVERRIDE	On	if OFF Status was cancelled using the digital input or through Supervision	On	-
SYS ON	On	if the Unit is working in normal Mode	On	-
WARNING ON	On	if the Unit is working in normal Mode, with active Warning.	On	-
SETBACK	On	Low Zone temperature, unit restarted to heat up	On	No
FAN ONLY	ON	Only the fan is operating, no control of cooling, heating, hum or dehum	On	Yes

3.1.2 How to Move in the Flexmatic Window

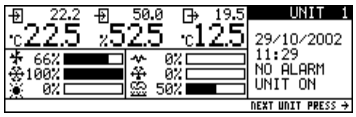

◄ ►

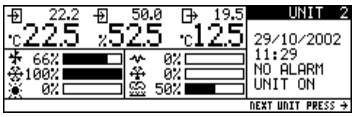

◄ ► to next unit

▲
▼

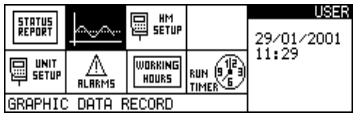

User menus:

◄ ► ▲▼ to select the menu, "Enter" to enter the menus,

◄ (2 sec) to go back to previous screen or to un-mark the selected icon.

▲
▼

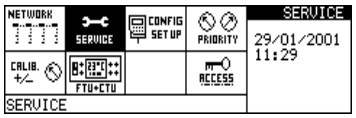

Service menus:

◄ ► ▲▼ to select the menu, "Enter" to enter the menus,

◄ (2 sec) to go back to previous screen or to un-mark the selected icon.

NOTE: changing from one window to the next is possible only with un-marked icons.

3.1.3 The Menus

The menus are divided in two groups: User and Service menus. **User menus** contain parameters for the daily operation (like setpoints, timer settings etc.); **Service menus** contain parameters for setup, troubleshooting and manual operating mode.

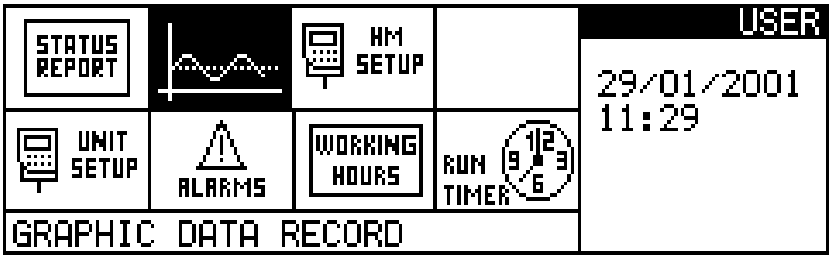

3.1.4 User Menus

This window contains the following menus (from top left to bottom right).

	Readable w/o Password	Write Access Level
STATUS REPORT	YES	read only
GRAPHIC DATA RECORD	YES	(LEVEL 0)
HM (FLEXMATIC) SETUP	YES	(LEVEL 1)
UNIT SETUP	YES	(LEVEL 1)
WARNINGS / ALARMS	YES	(LEVEL 1)
WORKING HOURS	YES	(LEVEL 1)
TIMER SETTINGS	YES	(LEVEL 1)

STATUS REPORT

Status Report

The status report contains the last 200 events (for each individual unit), which occurred to the unit, in order of appearance. Each unit contains its own collection of 66 pages. Use ◀ and ▶ button to move from one unit to the next.

Left (◀) from unit no. 1 there is the so called “System report”, a summary of all events of all connected units.

NOTE: The status report can be entered by pressing “Enter” from a unit’s main screen.

```
STATUS REPORT PAGE      66          UNIT1
21.02.2001 20:10        RESET

21.02.2001 20:10        ACKNOWLEDGE

20.02.2001 16:45        WARNING
HIGH ZONE TEMPERATURE
```

Graphic Data Records

For each single unit, an 8-day graphic data record as well as a 24-hour record for return air temperature, supply air temperature and return humidity is available. The temperature/humidity scale can be adjusted (Enter- UP/DOWN). The records are stored after power off.

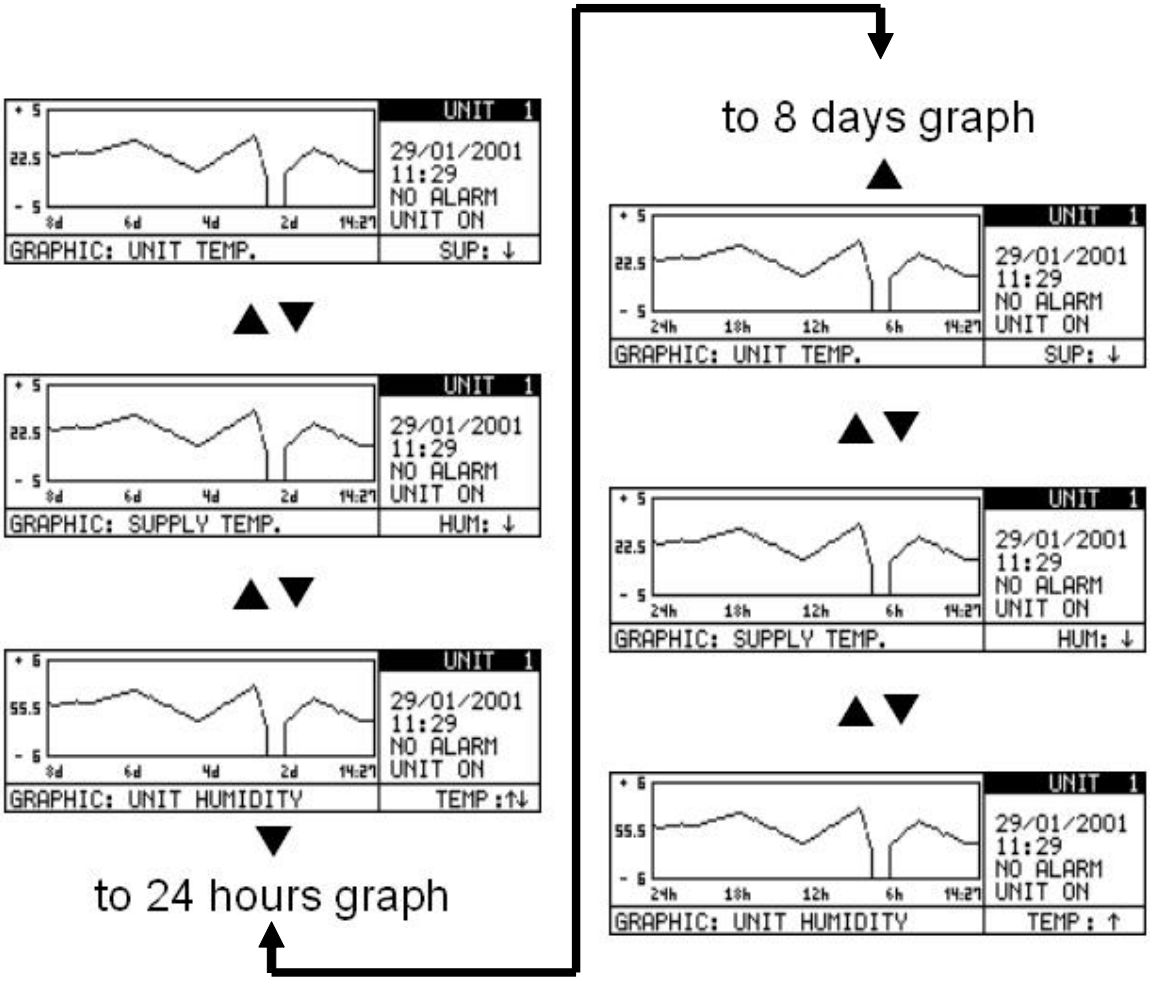

HM Setup

000	Flexmatic Set-up 1 of 1	
001	PASSWORD (LEVEL0)	????
002	LANGUAGE :	ENGLISH
003	TIME :	22:12
004	DATE :	TH 22/06/2002
005	TEMP. INDICATION	°C
006	CONTRAST :	74
007	BUZZER FRQ:	OFF / 0.6

001 Help: PASSWORD for read/write access password level 1 needs to be entered for USER windows, password level 5 for SERVICE windows.	002 Help: Flexmatic Set-up 1 of 1 002: Flexmatic language selection 003, 004: time / date to be entered. 006: Increase / decrease value to optimise the contrast of the Flexmatic display

001 Help: PASSWORD for read/write access password level 1 needs to be entered for USER windows, password level 5 for SERVICE windows.	003 Help: ZONE SETPOINT Setpoint valid during automatic operation.	004 Help: TUx SETp.RANGE The maximum allowed difference between the TUx setpoint and the zone setpoint set in line 112. If TUx setpoint was set higher / lower than allowed, it will jump back automatically to the highest / lowest possible setpoint.
005 Help: HUMIDITY SETPOINT For units equipped with humidity control. To be set to NO if no humidity control is requested.	006 Help: AUTORESTART After power on the unit will start its fan after the selected time (+ app. 20 seconds time the control needs to boot). 2 min. later the control starts to work.	007 Help: FANSPEED Fanspeed selection during normal operation. Can be set Low, Medium or High.

008 Help: OVERRIDE TIME

Pressing the Power ON/OFF button on the Flexmatic will activate the OVERRIDE time selected for the zone (UNIT set up page) and additionally DELAY time of fantiles if selected (TUx

Alarms

120	**WARNINGS / ALARMS 1 of 2**		
121	PASSWORD (LEVEL0)		????
122	HIGH ZONE TEMP.		28 °C
123	SET BACK	AVERAGE	14 °C
124	HIGH ZONE HUM.		75 %rH
125	LOW ZONE HUM.		35 %rH
126	HIGH SUPPLY TEMP.		47 °C
127	LOW SUPPLY TEMP.		12 °C

001 Help: PASSWORD for read/write access password level 1 needs to be entered for USER windows, password level 5 for SERVICE windows.	009 Help: HIGH ZONE TEMP. Gives a warning if the zone temperature is higher than the setting. Note: there is a time delay of 30 min. after unit on. Value may be set to NO	010 Help: SET BACK If the CAM-C/CAM-V is in operation and the calculated zone temperature (with setting AVERAGE) or one of the connected sensors or TUx values (with setting PEAK) is lower than the selected temperature for more than 2 min
011 Help: SET BACK a Warning "Low Zone Temperature" appears. If the CAM-C / CAM-V is not in operation and the calculated zone temp. (with setting AVERAGE) or one of the connected sensors or values of TUx (with setting PEAK) is lower than the	012 Help: SET BACK selected temperature for more than 2 min the CAM-C / CAM-V starts in automatic Mode, and continues operation until the temp. will increase +3K (fixed). Value may be set to NO.	013 Help: HIGH ZONE HUM. Gives a warning if the zone humidity is higher than the setting. Note: there is a time delay of 30 min. after unit on. Value may be set to NO
014 Help: LOW ZONE HUM. Gives a warning if the zone humidity is lower than the setting. Note: there is a time delay of 30 min. after unit on. Value may be set to NO	015 Help: HIGH SUPPLY TEMP. Gives a warning if the supply temperature is higher than the setting. Note: there is a time delay of 30 min. after unit on. Value may be set to NO.	016 Help: LOW SUPPLY TEMP. Gives a warning if the supply temp is lower than the setting. Note: there is a time delay of 30 min. after unit on. Value may be set to NO

130	**WARNINGS / ALARMS 2 of 2**	
131	PASSWORD (LEVEL0)	????
132		
133	USER INPUT1	WARNING
134	USER INPUT2	ALARM
135		
136		
137		

001 Help: PASSWORD for read/write access password level 1 needs to be entered for USER windows, password level 5 for SERVICE windows.	017 Help: USER INPUT1 User inputs are digital inputs, which can influence the operating mode of the unit. The possible settings are: WARNING: if the input opens, a warning appears.	018 Help: USER INPUT1 ALARM: if the input opens, an alarm appears and the unit stops. NHumi: if the input opens, the el.heater and the humidifier will be switched off. NotUsed: user input is not used. No physical cable-bridge necessary.
019 Help: USER INPUT1 LSI: Level sensor isolator: for over-filling protection of the humidifier. As soon a humidifier is selected, auto-matically user input 2 sets to “LSI”. Recovery: starts the recovery mode: all TUx off, unit on with fan only	020 Help: USER INPUT2 See above: User Input 1	

Working Hours

140	WORKING HOURS 1/2			
141	PASSWORD (LEVEL0)		????	
142		HOURS	LIMIT	START
143	FAN	123	32100	1
144				
145	CW	456	32000	
146	HW	789	32000	
147				

150	WORKING HOURS 2 of 2			
151	PASSWORD (LEVEL0)		????	
152		HOURS	LIMIT	START
153	HE1	333	32000	2
154	HE2	456	32000	3
155	HUM	789	32000	4
156	DEH	222	32000	6
157				

001 Help: PASSWORD for read/write access password level 1 needs to be entered for USER windows, password level 5 for SERVICE windows.	021 Help: WORKING HOURS The actual hours can be read in the column “HOURS”. For all components indiv. thresholds can be set (“LIMIT”). If surpassed, a warning will be generated.For better overview about the unit’s operation a counter (“START”),	022 Help: WORKING HOURS which counts the starts of the individual components, is implemented. Working hours are counted for : Fan (FAN) Chilled water valve (CW) Hot water valve (HW)
023 Help: WORKING HOURS Electrical heaters step 1 (HE1) Electrical heaters step 2 (HE2) Humidifier (HUM) Dehumidification (DEH)		

Runner Timer

500	STANDARD DAYS				ENABLED
501	PASSWORD (LEVEL0)			????	
502	DAY MO TU WE TH FR SA SU				
503	TIME	MODE	SPEED	SETP	
504	07:00	ON	LOW	22.2	°C
505	08:00	OFF	MED	20.0	°C
506	09:00	REC	HIGH	22.9	°C
507	10:00	FAN	LOW	30.1	°C

001 Help: PASSWORD for read/write access password level 1 needs to be entered for USER windows, password level 5 for SERVICE windows.	024 Help: TIMER SETTINGS For the Timer 3 windows are available. First window sets the general settings: 500:To enable or disable the timer mode, set in this window. 502:Selection of the days, on which the time-settings will be performed.	025 Help: TIMER SETTINGS 503-507:TIME defines the starting point of the timer mode. MODE: ON = Unit ON, OFF = Unit OFF, REC = Recovery, FAN = Fan only mode. (If set to 'OFF', SPEED and SETPOINT are ingnored, but the unit may run when in 'override' mode.
026 Help: TIMER SETTINGS SPEED defines the fanspeed during the timer mode, SETP (Setpoint) sets the setpoint during the timer mode. NOTE 1: if days are not selected, the unit will remain off (timer off).	027 Help: TIMER SETTINGS NOTE 2: before to change any settings, disable the timer first, set your settings, and then re-enable the timer again. NOTE 3: If the timer is used just to start and stop the units (always keeping	028 Help: TIMER SETTINGS the same setpoint), 'private' setpoints on the TUs remain unchanged If different setpoints are used during timer mode, the TUs setpoints are equalised any time the timer setpoint changes.

510	EXCEPTION DAYS				ENABLED
511	PASSWORD (LEVEL0)			????	
512	DAY MO TU WE TH FR SA SU				
513	TIME	MODE	SPEED	SETP	
514	07:00	ON	LOW	22.2	°C
515	08:00	OFF	MED	20.0	°C
516	09:00	REC	HIGH	22.9	°C
517	10:00	FAN	LOW	30.1	°C

520	YEARLY EXCEPT.				ENABLED
521	PASSWORD (LEVEL0)			????	
522		DAY		DAY	
523	D1:	01.01.	D5:	13.07.	
524	D2:	31.03.	D6:	00.00.	
525	D3:	22.05.	D7:	00.00.	
526	D4:	26.06.	D8:	00.00.	
527					

001 Help: PASSWORD for read/write access password level 1 needs to be entered for USER windows, password level 5 for SERVICE windows.	029 Help: EXCEPTION DAYS The Exception Days override the DAY SETTINGS (if day settings are enabled). Exception days are active only on the selected days, unselected days operate either in std. timer mode or in standard mode.	030 Help: YEARLY EXCEPT. Yearly Exception Days have the highest priority inside the timer hierarchy. It overrides the Day Settings as well as the Exception Days. 8 days of the year are selectable (Christmas etc.). On those days the unit goes off.

3.1.3 Service menus

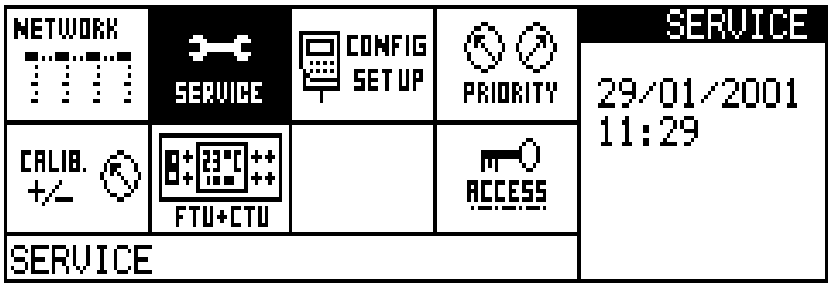

The Window contains the following Menus (from top left to bottom right).

	Readable w/o Password	Write Access Level
NETWORK SETUP	YES	(LEVEL 5)
SERVICE	YES	(LEVEL 5)
UNIT CONFIGURATION	YES	(LEVEL 5)
SENSOR PRIORITY	YES	(LEVEL 5)
CALIBRATION	YES	(LEVEL 4)
TU	YES	(LEVEL 5)
PASSWORDS	NO	(LEVEL 3)

Network Setup

020	COMMUNICATIONS 1 of 2	
021	PASSWORD (LEVEL0)	????
022	NUMBER OF UNITS	4
023	FLEXNET ID NUMBER	1
024	COMMUNICATION	READ/WRITE
025		
026		
027		

001 Help: PASSWORD for read/write access password level 1 needs to be entered for USER windows, password level 5 for SERVICE windows.	031 Help: NETWORK SETUP 022 defines the number of Flexfaces (= number of CAM-C / CAM-V) within the Flexbus-network. 023 defines the Flexnet ID number. 024 defines if commands from Flexlink will be accepted (read/write) or not (read).

```
UNIT1  UNIT ON 14          9
UNIT2  UNIT ON 42          10
UNIT3  UNIT ON 33          11
     4                     12
     5                     13
     6                     14
     7                     15
     8                     16
```

032 Help: NETWORK SETUP In this window all connected units are listed with their status. Note: there is an auto-detection of new units, the string “UNIT” appears for the configured number of units only, the status appears for connected units only.	033 Help: NETWORK SETUP The number beside the status shows the number of connected TUs. (Masters and Slaves together).

SERVICE

Services

200	SERVICE 1 of 3			
201	PASSWORD (LEVEL0)			????
202	MANUAL:	ON	HUM :	ON
203	FAN :	ON	DRAIN :	ON
204	3P.CW :	67%	DEHUM :	ON
205	3P.HW :	0%	AL.REL:	ON
206	HEAT 1:	OFF	ANA 1 :	14%
207	HEAT 2:	OFF	SPC :	73%

001 Help: PASSWORD for read/write access password level 1 needs to be entered for USER windows, password level 5 for SERVICE windows.	034 Help: SERVICE The manual mode allows to run all components in manual mode (= override of control) with safety devices active. Before starting any component it is necessary to set the unit in manual mode (202) and to start the fan (203).

210	SERVICE 2 of 3		
211			
212	REMOTE	o-o	ON
213	FIRE ALARM	o-o	OK
214	FILTER	o-o	WA
215	USER INPUT1	o-o	ACT
216	USER INPUT2	o-o	AL
217	LSI	o-o	ACT

220	SERVICE 3 of 3		
221			
222	OVERRIDE	o-o	OK
223	HW OK	o-o	ON
224	TSR	o-o	ON
225	RECOVERY	o-o	ON
226			
227			

001 Help: PASSWORD for read/write access password level 1 needs to be entered for USER windows, password level 5 for SERVICE windows.	035 Help: SERVICE Window 2 and 3 give an overview about the digital inputs: there is a graphical symbol about the electrical contact of the input and a description which gives info about the status of the input:	036 Help: SERVICE OK: contact closed, no action WA: input in warning position AL: input in alarm position ACT: input active ON: input function active

Unit Configuration

There are eight windows, which define the optional devices as well as the control parameters of the unit. Settings in this menu must be done from qualified personnel only.

300	UNIT CONFIGURATION 1 of 11		
301	PASSWORD (LEVEL0)		????
302	UNIT TYPE:		SINGLE COIL
303	STD. SETTINGS		YES
304	HM ON/OFF ENABLED		NO
305	CW/HW ACT.RUNTIME	170 sec	170 sec
306	EL. HEATING STEPS		3
307	HW + EL HEATERS		YES

001 Help: PASSWORD for read/write access password level 1 needs to be entered for USER windows, password level 5 for SERVICE windows.	037 Help: UNIT TYPE: Single or double coil, to be set according the unit's configuration.	038 Help: STD. SETTINGS See parameter list in the manual. After changing the Flexface for any reason the standard settings should be loaded at the very beginning. It sets all parameters to pre-defined values.
039 Help: HM ON/OFF ENABLED Defines if the unit can be switched on or off from the Flexmatic	040 Help: CW/HW ACT.RUNTIME The time needed from the actuators to move from closed to fully open.	041 Help: EL. HEATING STEPS 306:Defines number of heating steps. 307:If set yes, both the el. Heaters and the hotwater valve may work at the same time, if the control requests. If set to no, el. Heaters will work only if hot water is not available.

310	UNIT CONFIGURATION 2 of 11		
311	PASSWORD (LEVEL0)	????	
312	FANSPEED LOW	33	%
313	FANSPEED MED	66	%
314	FANSPEED HIGH	100	%
315			
316	HUMIDITY P-BAND	15	% rH
317	HUM COMPENSATION	YES	

001 Help: PASSWORD for read/write access password level 1 needs to be entered for USER windows, password level 5 for SERVICE windows.	042 Help: FANSPEED Sets the output voltage (0-100%) for the different fanspeed levels: low, medium and high.	043 Help: HUMIDITY P-BAND The selected bandwidth divides in two equal parts: one for humidification, the other one for dehumidification. Both functions start at their end of the proportional band and stop at the setpoint.
044 Help: HUM COMPENSATION If enabled, the control recalculates the humidity setpoint according the actual return temperature. 1 'C deviation from the temp.setpoint changes the hum setpoint with 4%rH. (indirect proportional function)		

300	UNIT CONFIGURATION 1 of 11		
301	PASSWORD (LEVEL0)		????
302	UNIT TYPE:		SINGLE COIL
303	STD. SETTINGS		YES
304	HM ON/OFF ENABLED		NO
305	CW/HW ACT.RUNTIME	170 sec	170 sec
306	EL. HEATING STEPS		3
307	HW + EL HEATERS		YES

001 Help: PASSWORD for read/write access password level 1 needs to be entered for USER windows, password level 5 for SERVICE windows.	037 Help: UNIT TYPE: Single or double coil, to be set according the unit's configuration.	038 Help: STD. SETTINGS See parameter list in the manual. After changing the Flexface for any reason the standard settings should be loaded at the very beginning. It sets all parameters to pre-defined values.
039 Help: HM ON/OFF ENABLED Defines if the unit can be switched on or off from the Flexmatic	040 Help: CW/HW ACT.RUNTIME The time needed from the actuators to move from closed to fully open.	041 Help: EL. HEATING STEPS 306:Defines number of heating steps. 307:If set yes, both the el. Heaters and the hotwater valve may work at the same time, if the control requests. If set to no, el. Heaters will work only if hot water is not available.

310	UNIT CONFIGURATION 2 of 11		
311	PASSWORD (LEVEL0)	????	
312	FANSPEED LOW	33	%
313	FANSPEED MED	66	%
314	FANSPEED HIGH	100	%
315			
316	HUMIDITY P-BAND	15	% rH
317	HUM COMPENSATION	YES	

001 Help: PASSWORD for read/write access password level 1 needs to be entered for USER windows, password level 5 for SERVICE windows.	042 Help: FANSPEED Sets the output voltage (0-100%) for the different fanspeed levels: low, medium and high.	043 Help: HUMIDITY P-BAND The selected bandwidth divides in two equal parts: one for humidification, the other one for dehumidification. Both functions start at their end of the proportional band and stop at the setpoint.
044 Help: HUM COMPENSATION If enabled, the control recalculates the humidity setpoint according the actual return temperature. 1 'C deviation from the temp.setpoint changes the hum setpoint with 4%rH. (indirect proportional function)		

341	PASSWORD (LEVEL0)	????	
342	HUMIDIFIER ENABLE	NO	
343	MODEL / SUP VOLT	93H/ 400	V
344	STEAM RATE	100	%
345	CONTROL	ON/OFF	
346	AMPS NOM/ACT	10.3 / 5.2	A
347	DEADBAND	10	% rH

001 Help: PASSWORD

for read/write access password level 1 needs to be entered for USER windows, password level 5 for SERVICE windows.

053 Help: HUMIDIFIER ENABLE
342: to enable or disable the humidifier
343: according the steam cylinder mounted in the unit.
344: selectable to NO (Humidifier off), or from 30 – 100%.

054 Help: CONTROL
ON-OFF: Humidifier starts at the end of the proportional band, and operates with the selected steamrate until humidity reaches the setpoint.
Proportional: Steamrate is modulated acc. the deviation from the setpoint.

055 Help: AMPS NOM/ACT
Read only value of the current to be reached (nominal), and the actual current (act).

056 Help: DEADBAND
Humidity control deadband.
Defines a “dead zone” (no control operation) around the setpoint.

350	UNIT CONFIGURATION 6 of 11			
351	MULTIDIG INPUT			
352	DEHUM ENABLE		NO	
353				
354	DEADBAND		20	% rH
355	LWD / LWD INPUT	NO	/ 1,5	V
356	ANALOG OUTPUT 1		COOLING	
357	ANALOG OUTPUT 2			

001 Help: PASSWORD

for read/write access password level 1 needs to be entered for USER windows, password level 5 for SERVICE windows.

057 Help: DEHUM ENABLE
352: to enable/disable dehumidification.

058 Help: LWD / LWD INPUT
Shows the values of the Leakage Water Detector. NO = No sensor connected, Warning = warning at water detection, Alarm = stops unit at water detection. The value informs about the act. Status: dry sensors: around 1.4 and 1.6 volts.

059 Help: ANALOG OUTPUT 1
Analogue Output 1: can be used for several functions:
COOLING gives the cooling deviation (0-100% = 0-10V)
HEATING gives the heating deviation (0-100% = 0-10V)

060 Help: ANALOG OUTPUT 1
ALARMB. (Alarmboard) drives an add. card to get voltfree alarm contacts
HUMID. gives the humidifier deviation (0-100% = 0-10V)
NOT USED = nothing connected

061 Help: ANALOG OUTPUT 1
RET.TEMP gives the actual zone temp. (0-50°C = 0-10V)S
SUP.TEMP gives the actual supply air temperature (0-50°C = 0-10V)
HEATERB. drives an add. board (Heater-board) to ctrl. the el. heater steps

360	UNIT CONFIGURATION 7 of 11		
361	PASSWORD (LEVEL0)	????	
362	LOW AIRFLOW AT	SWI	
363	AUTOSET AIRFLOW	YES	
364	AIRFLOW VALUE	44	%
365	FAN FAILURE	WARNING	
366	MIN. FRESH AIR	0	
367	MAX. FRESH AIR	3	

001 Help: PASSWORD for read/write access password level 1 needs to be entered for USER windows, password level 5 for SERVICE windows.	063 Help: LOW AIRFLOW AT To detect low airflow warning / alarm. Shall be set to “SWI” if differential pressure switches are used, shall be set to a value in % if the PTC-airflow sensor is used. The value will be found automatically with parameter 373.	064 Help: AUTOSET AIRFLOW Stop Unit first. Set Parameter to 'YES'. Unit will start the fan for 30 seconds, and then wait 30 seconds with fan off. After that the value will be set automatically. If a warning appears, there was no reaction from the airflow device.
065 Help: AIRFLOW VALUE Read only feedback from the airflow device.	066 Help: FAN FAILURE If set to warning, the unit continues to operate in case of fan failure (without el. Heaters and humidifier), if set to alarm the units shuts down on fan failure.	064 Help: AUTOSET AIRFLOW Stop Unit first. Set Parameter to 'YES'. Unit will start the fan for 30 seconds, and then wait 30 seconds with fan off. After that the value will be set automatically. If a warning appears, there was no reaction from the airflow device.

370	UNIT CONFIGURATION 8 of 11		
371	PASSWORD (LEVEL0)	????	
372	AIR VOL.RED.EN.	NO	
373	xTU GR.A NA/KPA	3 / 0.7	
374	xTU GR. B NB/KPB	3 / 0.8	
375	xTU GR. C NC/KPC	3 / 0.9	
376	xTU GR. D ND/KPD	3 / 1.0	
377	SPEED AT BUS INT.	MED	

001 Help: PASSWORD

for read/write access password level 1 needs to be entered for USER windows, password level 5 for SERVICE windows.

067 Help: AIR VOL.RED.EN.

For CAM-V units only.

372: Enable/disable the airflow reduction NA, NB, NC, ND; no. Of TUx in Group A-D KPA-KP: speed reduction factor for the 4 groups (used std.settings) 377: fanspeed if x TUx are disconnected

380	UNIT CONFIGURATION 9 of 11		
381	PASSWORD (LEVEL 0)		
382	DIFF.PRESS.CTRL.	DISABLED	
383	DP SENSOR ADDRESS	3	
384	DP SENSOR ERRORS	1	
385	DP SENSOR FILTER	10P/s	
386	DP SETPOINT (Pa)	12Pa	
387	DP PROP/INTG (Pa) / (s)	20Pa/120s	

383: DP SENSOR ADDRESS Pressure Sensor Address should equal 3

385: DP SENSOR FILTER Set the sensor reaction time in pascal per second. If the sensor is reacting too fast, lower values can be set

386: DP SETPOINT Change requested pressure setpoint if required

390	UNIT CONFIGURATION 10 of 11	
391	PASSWORD (LEVEL 0)	
392	DP PI RESULT	1.11
393	DP FANSPEED RESULT	1%
394	FANSPEED FILTER	1.0 % /s
395	USE MASTER MODE	NO
396	SuP DEADBAND 2	0.0K
397	DP PRESSURE ACT	1.1Pa

394: FANSPEED FILTER If the fanspeed is reacting too fast, a lower value is recommended. (fanspeed change in percent per second)

395: USE MASTER MODE To enable "Master Mode" at units with address 2 to 16, set this parameter to YES
In the master unit (address 1) this parameter has no effect.

If set to YES, the COOLING/HEATING/FANSPEED request of the master unit (address 1) is used.

396: DEADBAND You can set a TEMPERATURE deadband around the setpoint
A value of 2.0K means no cooling/heating request 1K above and 1K below the setpoint

3A0	UNIT CONFIGURATION 11 of 11	
3A1	PASSWORD (LEVEL 0)	
3A2	BLOCK COOL AT AMB <	0^0C
3A3	BLOCK HEAT AT AMB >	0^0C
3A4	HEATER DEADBAND	1
3A5	AMB TEMP EXT-BMS (^{0}C)	10P/s
3A6	USE 3-DIGIT DISPLAY	12Pa
3A7	T 0 H 0 F	0

3A2/3A3: BLOCK COOL/HEAT AT AMB <
Set the BLOCK cool or heat thresholds at desired outdoor temperature.

3A7: View the current Temperature (T), Humidity (H) and Fanspeed (F) request
T: 0 = no request, 10000 = full cooling request, -10000 = full heating request
H: 0 = no request, 10000 = full dehumification request, -10000 = full humidifcation request
F: 0 = no request, 100 = full fanspeed request

PRIORITY

Sensor Priority

600	SENSOR PRIORITY 1 of 1				
601	PW ???? (L0)	TEMP	PRI	HUM	PRI
602	PTC	23,4	50		
603	SENSOR 1	22,1	100	40	100
604	SENSOR 2	34,2	90	30	100
605	TU PEAK	22,2	100		
606	TUs	22,9	10	0	0
607	RESULT	25.4 C		35	% rH

001 Help: PASSWORD for read/write access password level 1 needs to be entered for USER windows, password level 5 for SERVICE windows.	068 Help: SENSOR PRIORITY This window allows to give different priority to the various sensor values. The calculation is based on relation: If all priorities are set to 100%, the calculation will perform just the mathematical average.	069 Help: SENSOR PRIORITY If one of the sensors has lower priority, its value will have less impact on the calculation. If priority was set to 0%, the value of the specific sensor is ignored. NOTE if only TU temps are used for the calculation,
070 Help: SENSOR PRIORITY PTC sensor will be used in case of Bus interruption. PTC: the return sensor of the unit. Sensor 1/2 : additional T/H sensor 1/2. TU Peak: shows the temp. Of the TU with the highest dev. from the setpoint.	071 Help: SENSOR PRIORITY TUs which are ignored are not included in the peak value. TUs: the average of all TUs which are not ignored due to the ignore strategy.	072 Help: SENSOR PRIORITY RESULT: shows the actual calculated value for temperature and humidity, which is used to control the unit.

Sensor Calibration

240	CALIBRATION 1 of 2			
241	PASSWORD (LEVEL0)			????
242			ACTUAL	OFFSET
243	RET TEMP.		20.0	- 2.2
244	SUP TEMP.		21.0	1.1
245	MODE:			NO
246	TU MID:	1/1 RT	23.1	11 / 11
247	TU SID:	0/0 UT	11.1	33 / 33

062 Help: PASSWORD

for read/write access password level 4 needs to be entered.

073 Help: CALIBRATION
RET.TEMP. = Return Air Temperature:
SUP.TEMP. = Supply Air Temperature
ACTUAL shows the read value (already including the offset), on the OFFSET parameter a value can be entered, which changes the actual value of the sensor.

074 Help: CALIBRATION
TU MID = TU Master ID
TU SID = TU Slave ID
To read the value of a TU, set the left hand values to the requested ID, go to MODE (in line 245) and set it to READ. The sensor values (RT = Room temp.)

250	CALIBRATION 2 of 2		
251	PASSWORD (LEVEL0)		????
252		ACTUAL	OFFSET
253	SENSOR 1T	24.1	0.0
254	SENSOR 1H	52.6	0.1
255	SENSOR 2T	22.2	0.2
256	SENSOR 2H	49.7	0.3
257	OUT TEMP.	22.0	0.0

062 Help: PASSWORD

for read/write access password level 4 needs to be entered.

077 Help: CALIBRATION
Sensor 1/2T: The temperature of the additional room-sensor 1/2.
Sensor 1/2H: The humidity of the additional room-sensor 1/2.
OUT.TEMP. = Outdoor Air Temperature

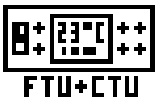

xTU

340	TUx CONFIGURATION		
341	PASSWORD (LEVEL0)	????	
342	MASTER TUx CONNECT	12	
343	AUTO-IGNORED TUx	1	
344	TUx OFF DELAY	15	min
345			
346			
347			

001 Help: PASSWORD

for read/write access password level 1 needs to be entered for USER windows, password level 5 for SERVICE windows.

078 Help: MASTER TUx CONNECT
To be set carefully: it is the number of how many master TUx are connected Setting a wrong value here will corrupt the reading of the temperatures.
NOTE: Master TUx must be numbered starting from 1 consecutively (1,2,3,…).

079 Help: AUTO IGNORED TUx
The number of most demanding TUx which should not be included in the calculation of the zone temperature.
The ignore function will be adapted according to the function of the CAM-C CAM-V unit: during cooling TUx with the highest temperature, during heating the TUx with the lowest temperature will be ignored.

081 Help: TUx OFF DELAY
after stopping the CAM-C / CAM-V the tus will continue to operate for the selected time.

(▼)

TU OVERVIEW	
PASSWORD (LEVEL0)	????
XTU 1/ 7/13/19:	10 / 12 / 00 / 00
XTU 2/ 8/14/20:	10 / 00 / 00 / 00
XTU 3/ 9/15/21:	10 / 00 / 00 / 00
XTU 4/10/16/22:	10 / 00 / 00 / 00
XTU 5/11/17/23:	10 / 00 / 00 / 00
XTU 6/12/18/24:	10 / 00 / 00 / 00

001 Help: PASSWORD

for read/write access password level 1 needs to be entered for USER windows, password level 5 for SERVICE windows.

082 Help: xTU OVERVIEW
The xTU overview informs about all connected TUs, Masters & Slaves
In the first line masters and slaves with ID 01/07/13/and 19 are listed:
The first number stands for the master, the second for the number of slaves.

(▼)

xTU SUMMARY					
	RT	UT	SET	FAN	IG
1:	22.1	21.9	23.0	67	N
2:	22.2	21.4	23.0	68	N
3:	22.3	21.4	23.0	69	Y
4:	21.8	21.1	23.0	40	Y
5:	23.4	22.1	23.0	55	A
6:	24.8	21.9	23.0	44	A

001 Help: PASSWORD for read/write access password level 1 needs to be entered for USER windows, password level 5 for SERVICE windows.	083 Help: xTU SUMMARY RT (room temperature) and UT (underfloor temperature) are read values. Setpoint (SET) and Fanspeed (FAN) can be set in these windows. IG means ignore: N for Never, A for Automatic, Y for YES (=always).

(▼)

xTU 1				
IG:	AUTO	RT/UT:	25.8 / 25.2 C	
	(▲) + 6			
SP:	26.5 C			
	- 6			
FS:	23%	24h	12h	13:22

001 Help: PASSWORD for read/write access password level 1 needs to be entered for USER windows, password level 5 for SERVICE windows.	084 Help: xTU 1 This window is read only. It informs about room temperature (RT), underfloor temperature (UT) and actual TU set-point (SP). FS (Fanspeed) is shown in % The room temperature draws a graphic of the last 24 hours.

(▲)

xTU STATUS			
ADR / MOD	1/ NO		
DM:	YES		
STB:	OFF	RT SL 0 / 4	23.3 / 25.9
SYS:	ON	RT SL 1 / 5	23.3 / 25.9
DAM:	OFF	RT SL 2 / 6	23.3 / 25.9
HEA:	OFF	RT SL 3 / 7	23.3 / 25.9

085 Help: xTU STATUS
To read data the command MOD = READ must be performed first.
ADR: to select the address of the TU
MOD: NO = no action,
READ = read values, SET = set values.

086 Help: xTU STATUS
DM: for double sensor xTU: for indication only. YES =Heating, NO =Cooling.
For single sensor xTU: to be set to YES for heating operation,
NO for cooling operation.

087 Help: xTU STATUS
STB: xTU in standby. Not used read only.
SYS: xTU in operation (SYS ON) or off (SYS OFF). (read only)
DAM: position of the damper: on = open, off = closed.
HEA:status of the el. heater: on or off.

088 Help: xTU STATUS
RT: the room temperatures of the master (ID 0) and of all possible connected slaves (ID 1-7) are shown.

(▲)

XTU CONFIGURATION			
MODE:	READ	RTOFF:	20 / 20
MA ID:	1 / 1	UTOFF:	24 / 24
SL ID:	0 / 0	FSMIN:	0 / 0
FSC:	Y / Y	FANSP:	0 / 0
TYPE:	O / O	XTU T:	NO / NO
SW CO	3 / 3	R.INT:	X / X
HTR D:	0 / 0	C.TIM:	X / X

089 Help: XTU CONFIGURATION
MODE: NO = no action,
READ = read values, SET = set values.
MA ID: Master ID (select the left hand number to read data, select the right hand number to write).
SL ID: Slave ID (select the left hand

090 Help: XTU CONFIGURATION
number to read data, select the right hand number to write).
NOTE: Changing the address of a xTU: never change both addresses at the same time. If a xTU needs to be changed from master to a slave of a different address

091 Help: XTU CONFIGURATION
group, do it in to steps: change master (or slave) id first, afterwards set the slave (or master) id.
FAN L: Local fanspeed management: Y (Master), N (Slave) or D (Default).
M TYP: Mounting: U (CTU) / O (FTU)

092 Help: XTU CONFIGURATION
SET S: Summer / Winter setpoint shifting. Set from 0 – 4 K.
HTR D: Electrical heaters delay.
Set from 0,10 .. 310 (0-31 minutes),
320 means heater excluded.
RT OF:offset of room temperature sensor.

093 Help: XTU CONFIGURATION
UT OF:offset of underfloor temp. sensor.
FA OF: Slave speed offset.
FAN R: Fanspeed 0 - 58 = 0 - 100%.
XTU T: BLACK = Black TU, STD. = Fatronic
EVOL. = Fatronic Evolution

094 Help: XTU CONFIGURATION
R.INT: Read interval Black TU: 0-60 min.
C.TIM: Read time Black TU, 0-200 sec.

Access

This window allows changing the passwords. It is protected by a special password. Please contact your local dealer / service department if you want to have the passwords changed. Actually following passwords are in use (to be filled in manually):

Level	Access rights	Password:
Level 1	User Level	
Level 5	Service Level	
Level 4	Sensor calibration	

3.2 Flexmatic Parameter List

Parameter Name	Nr.	Read Write	HM (Flexmatic) Range		Res.	Init Value	Std. Set.
UNIT MAIN WINDOW	**-**						
ZONE TEMPERATURE	-	R	-28.0 - 100	°C	0.1	-	
ZONE SETPOINT	-	R	-	°C	0.1	-	
ZONE HUMIDiTY	-	R	0 - 100	%rH	1	-	
HUMIDITY SETPOINT	-	R	-	sec	1	-	
SUPPLY TEMPERATURE	-	R	-28.0 - 100	°C	0.1	-	
SUPPLY SETPOINT	-	R	-	°C	0.1	-	
FANSPEED	-	R	0 - 100	%	1	-	
COOLING OUTPUT	-	R	0 - 100	%	1	-	
LPHW OUTPUT	-	R	0 - 100	%	1	-	
EL. HEATING OUTPUT	-	R	0 - 100	%	1	-	
HUM OUTPUT	-	R	0 - 100	%	1	-	
DEHUM OUTPUT	-	R	0 - 100	%	1	-	
FLEXMATIC SETTINGS 1 OF 1	**000**						
PASSWORD (LEVEL0)	001	W	-	-	-	-	-
LANGUAGE :	002	W	ENGLISH	-	-	ENGLISH	-
TIME :	003	W	hh:mm	-	-	-	-
DATE :	004	W	dd:mm:yy	-	-	-	-
FLEXNET :	005	W	RW, RO	-	-	°C	-
CONTRAST :	006	W	170 – 255	-	1	200	-
BUZZER FRQ:	007	W	0.1 – 2.0	-	0.1	0.5	-
USER SETTINGS 1 of 1	**110**						
PASSWORD (LEVEL0)	111	W	-	-	-	-	-
ZONE SETPOINT	112	W	18.0 - 28.0	°C	0.1	23.0	23.0
TU SETPOINT RANGE	113	W	0 - 10	K	1	0.	0.
HUMIDITY SETPOINT	114	W	NO , 20 - 80	%rH	1	NO	NO
AUTORESTART	115	W	0 - 999	sec	1	1	1
FANSPEED	116	W	LOW ,MED ,HIGH	-	-	MED	MED
OVERRIDE TIME	117	W	0 - 60	min	1	30	30
WARNINGS / ALARMS 1 of 2	**120**						
PASSWORD (LEVEL0)	121	W	-	-	-	-	-
HIGH ZONE TEMP.	122	W	NO , 1 - 99	°C	1	NO	NO
SET BACK	123	W	NO , 1 - 99	°C	1	NO	NO
SET BACK	123	W	AVERAGE , PEAK	-	-	NO	NO
HIGH ZONE HUM.	124	W	NO , 1 - 99	%rH	1	NO	NO
LOW ZONE HUM.	125	W	NO , 1 - 99	%rH	1	NO	NO
HIGH SUPPLY TEMP.	126	W	NO , 1 - 99	°C	1	NO	NO
LOW SUPPLY TEMP.	127	W	NO , 1 - 99	°C	1	NO	NO
WARNINGS / ALARMS 2 of 2	**130**						
PASSWORD (LEVEL0)	131	W	-	-	-	-	-
USER INPUT1	133	W	WARNING , ALARM , NHumi , NotUsed , LSI , Recover	-	-	WARNING	WARNING
USER INPUT2	134	W	WARNING , ALARM , NHumi , NotUsed , LSI , Recover	-	-	LSI	LSI
WORKING HOURS 1 of 2	**140**						
PASSWORD (LEVEL0)	141	W	-	-	-	-	-
FAN HOURS	143	R	0 - 32000	Hrs	1	-	-
FAN LIMIT	143	W	0 - 32000	Hrs	1	20800	20800
FAN START	143	R	0 - 32000	-	1	-	-
CW HOURS	145	R	0 - 32000	Hrs	1	-	-
CW LIMIT	145	W	0 - 32000	Hrs	1	10400	10400
CW	145	R	0 - 32000	-	1	-	-
HW HOURS	146	R	0 - 32000	Hrs	1	-	-
HW LIMIT	146	W	0 - 32000	Hrs	1	10400	10400
HW	146	R	0 - 32000	-	1	-	-

Parameter Name	Nr.	Read Write	HM (Flexmatic) Range		Res.	Init Value	Std. Set.
WORKING HOURS 2 of 2	**150**						
PASSWORD (LEVEL0)	151	W	-	-	-	-	-
HE1 HOURS	153	R	0 - 32000	Hrs	1	-	-
HE1 LIMIT	153	W	0 - 32000	Hrs	1	10400	10400
HE1 START	153	R	0 - 32000	-	1	-	-
HE2 HOURS	154	R	0 - 32000	Hrs	1	-	-
HE2 LIMIT	154	W	0 - 32000	Hrs	1	10400	10400
HE2 START	154	R	0 - 32000	-	1	-	-
HUM HOURS	155	R	0 - 32000	Hrs	1	-	-
HUM LIMIT	155	W	0 - 32000	Hrs	1	1000	1000
HUM START	155	R	0 - 32000	-	1	-	-
DEH HOURS	156	R	0 - 32000	Hrs	1	-	-
DEH LIMIT	156	W	0 - 32000	Hrs	1	500	500
DEH START	156	R	0 - 32000	-	1	-	-
DAY SETTINGS	**500**						
DAY SETTINGS	500	W	ENABLED , DISABLED	-	-	DISABLED	DISABLED
PASSWORD (LEVEL0)	501	W	-	-	-	-	-
DAY	502	W	MO TU WE TH FR SA SU	-	-	Mo - Fr	Mo - Fr
TIME	504 - 507	W	4 x hh:mm	-	-	8:00 - 18:00	8:00 - 18:00
MODE	504 - 507	W	ON , OFF	-	-	ON	ON
SPEED	504 - 507	W	LOW ,MED ,HIGH	-	-	MED	MED
SETP	504 - 507	W	5.0 - 40.0	°C	0.1	23.0	23.0
EXCEPTION DAYS	**510**						
EXCEPTION DAYS	510	W	ENABLED , DISABLED			DISABLED	DISABLED
PASSWORD (LEVEL0)	511	W	-	-	-	-	-
DAY	512	W	MO TU WE TH FR SA SU	-	-	Sa, Su	Sa, Su
TIME	514 - 517	W	4 x hh:mm	-	-	8:00 - 12:00	8:00 - 12:00
MODE	514 - 517	W	ON , OFF	-	-	ON	ON
SPEED	514 - 517	W	LOW ,MED ,HIGH	-	-	MED	MED
SETP	514 - 517	W	5.0 - 40.0	-	-	23.0	23.0
YEARLY EXCEPT.	**520**						
YEARLY EXCEPT.	520	W	ENABLED , DISABLED	#REF!	-	DISABLED	-
PASSWORD (LEVEL0)	521	W	-	-	-	-	-
DAY	523 - 526	W	8 x dd:mm	-	-	00.00	-
NETWORK SETUP 1 of 2	**020**						
PASSWORD (LEVEL0)	021	W	-	-	-	-	-
NUMBER OF UNITS	022	W	1 - 16	-	1	1	-
MIC ID NUMBER	023	W	1 - 99	-	1	1	-
COMMUNICATION	024	W	READ/WRITE	-	-	-	-
NETWORK SETUP 2 of 2	**-**						
STATUS UNIT 01 - 16	-	R	-	-	-	-	-
NUMBER TUs 01 - 16	-	R	-	-	-	-	-
SERVICE 1 of 3	**200**						
PASSWORD (LEVEL0)	201	W	-	-	-	-	-
MANUAL:	202	W	ON , OFF	-	-	-	-
FAN :	203	W	0 - 100	%	1	-	-
3P.CW :	204	W	0 - 100	%	1	-	-
3P.HW :	205	W	0 - 100	%	1	-	-
HEAT 1:	206	W	ON , OFF	-	-	-	-
HEAT 2:	207	W	ON , OFF	-	-	-	-
HUM :	202	W	ON , OFF	-	-	-	-
DRAIN :	203	W	ON , OFF	-	-	-	-
DEHUM :	204	W	ON , OFF	-	-	-	-
AL.REL:	205	W	ON , OFF	-	-	-	-
ANA 1 :	206	W	0 - 100	%	1	-	-
SPC :	207	W	0 - 100	%	1	-	-

Parameter Name	Nr.	Read Write	Flexmatic Range		Res.	Init Value	Std. Set.	User Set
SERVICE 2 of 3	**210**							
REMOTE	212	R	ON , OFF	-	-	-	-	
FIRE ALARM	213	R	OK , AL	-	-	-	-	
FILTER	214	R	OK , WA	-	-	-	-	
USER INPUT1	215	R	OK , ACT , WA , AL	-	-	-	-	
USER INPUT2	216	R	OK , ACT , WA , AL	-	-	-	-	
LSI	217	R	OK , ACT	-	-	-	-	
SERVICE 3 of 3	**220**							
OVERRIDE	222	R	ON , OFF	-	-	-	-	
HW OK	223	R	OK , OFF	-	-	-	-	
TSR	224	R	OK , AL	-	-	-	-	
RECOVERY	225	R	ON , OFF	-	-	-	-	
UNIT CONFIGURATION 1 of 8	**300**							
PASSWORD (LEVEL0)	301	W	-	-	-	-	-	
UNIT TYPE:	302	W	SINGLE COIL , DOUBLE COIL	-	-	DOUBLE COIL	-	
STD. SETTINGS	303	W	YES , NO	-	-	-	-	
HM ON/OFF ENABLED	304	W	YES , NO	-	-	YES		
CW/HW ACT.RUNTIME	305	W	30 - 500	sec	1	170	170	
CW/HW ACT.RUNTIME	305	W	30 - 500	sec	1	170	170	
EL. HEATING STEPS	306	W	0, 1, 2, 3	-	-	0.	-	
HW + EL HEATERS	307	W	YES , NO	-	-	NO	-	
UNIT CONFIGURATION 2 of 8	**310**							
PASSWORD (LEVEL0)	311	W	-	-	-	-	-	
FANSPEED LOW	312	W	0 - 100	%	1	0.	0.	
FANSPEED MED	313	W	0 - 100	%	1	70	70	
FANSPEED HIGH	314	W	0 - 100	%	1	100	100	
HUMIDITY P-BAND	316	W	2 - 60	%rH	1	10	10	
HUM COMPENSATION	317	W	YES , NO	-	-	YES	YES	
UNIT CONFIGURATION 3 of 8	**320**							
PASSWORD (LEVEL0)	321	W	-	-	-	-	-	
RET. INTEGRATION	322	W	NO , 60 - 900	sec	1	300	600	
SUP.COMPENS.FACTOR	323	W	1.0 - 10.0	-	0.1	4.0	3.7	
SUP MIN/MAX	324	W	0 - 50	°C	0.1	10.0	13	
SUP MIN/MAX	324	W	0 - 50	°C	0.1	30.0	32	
SUPPLY P/I	325	W	1 - 30	K	1	4	10	
SUPPLY P/I	325	W	NO , 60 - 900	sec	1	180	22	
SUPPLY DEADBAND	326	W	0 - 10	K	1	2	1	
OPP. FUNCT. DELAY	327	W	0 - 30	min	1	3	5	
UNIT CONFIGURATION 4 of 8	**330**							
PASSWORD (LEVEL0)	331	W	-	-	-	-	-	
OUTDOOR COMPENS.	332	W	ENABLED , DISABLED			DISABLED	-	
ACT.OUTDOOR TEMP.	333	R	-28.0 - 100.0	°C	0.1	-	-	
SU COMP. STARTS AT	334	W	0 - 40	°C	1	32	32	
WI COMP. STARTS AT	335	W	0 - 40	°C	1	16	16	
SU / WI FACTOR	336	W	0.0 - 5.0	K	0.1	2.0	2.0	
SU / WI FACTOR	336	W	0.0 - 5.0	K	0.1	2.0	2.0	
MAX K+ SU / WI	337	W	0 - 10	K	1	3	3	
MAX K+ SU / WI	337	W	0 - 10	K	1	3	3	
UNIT CONFIGURATION 5 of 8	**340**							
PASSWORD (LEVEL0)	341	W	-	-	-	-	-	
HUMIDIFIER ENABLE	342	W	YES , NO	-	-	NO	-	
MODEL / SUP VOLT	343	W	21L, 53L, 53H, 93L, 93H,	-	-	53H	53H	
MODEL / SUP VOLT	343	W	230, 400, 460, 575	V	-	400	400	
STEAM RATE	344	W	NO , 30 - 100	%	10	NO	NO	
CONTROL	345	R	ON/OFF , PROP	-	-	ON/OFF	ON/OFF	
AMPS NOM/ACT	346	R	0.0 - 40.0	A	0.1	-	-	
AMPS NOM/ACT	346	W	0.0 - 40.0	A	0.1	-	-	
DEADBAND	347	W	0 - 50	%rH	1	0.	-	

Parameter Name	Nr.	Read Write	Flexmatic Range		Res.	Init Value	Std. Set.	User Set
UNIT CONFIGURATION 6 of 8	**350**							
PASSWORD (LEVEL0)	351	W	-	-	-	-	-	
DEHUM ENABLE	352	W	YES , NO	-	-	NO	-	
DEADBAND	354	W	0 - 50	%rH	1		-	
LWD / LWD INPUT	355	W	NO , WARNING , ALARM	-	-	NO	-	
LWD / LWD INPUT	355	R	0 - 2.5	V	0.1	-	-	
ANALOG OUTPUT 1	356	W	COOLING , ALARMB. , HEATING , HUMID. , RET.TEMP , SUP.TEMP , HEATERB. , SUPERS.			HEATERB.	HEATERB.	
ANALOG OUTPUT 2	**357**	**W**	**COOLHEAT , FANSPEED**			**FANSPEED**	**FANSPEED**	
UNIT CONFIGURATION 7 of 8	360							
PASSWORD (LEVEL0)	361	W	-	-	-	-	-	
LOW AIRFLOW AT	362	W	SWI , 0 100	%	1	00:00	28	
AUTOSET AIRFLOW	363	W	YES , NO	-	-	NO	-	
AIRFLOW VALUE	364	R	0 - 100	%	1	-	-	
FAN FAILURE	365	W	WARNING , ALARM	-	-	WARNING	-	
MIN. FRESH AIR	366	W	0-3	-	1	-	-	
MAX. FRESH AIR	367	W	0-3	-	1	-	-	
UNIT CONFIGURATION 8 of 8	**370**							
PASSWORD (LEVEL0)	371	W	-	-	-	-	-	
AIR VOL.RED.EN.	372	W	YES , NO	-	-	NO	-	
xTU GR. A NA/KPA	373	W	0 - 24	-	1	0.	-	
xTU GR. A NA/KPA	373	W	0.1 - 10	-	0.1	0.5	-	
xTU GR. B NB/KPB	374	W	0 - 24	-	1	0.	-	
xTU GR. B NB/KPB	374	W	0.1 - 10	-	0.1	0.8	-	
xTU GR. C NC/KPC	375	W	0 - 24	-	1	0.	-	
xTU GR. C NC/KPC	375	W	0.1 - 10	-	0.1	0.9	-	
xTU GR. D ND/KPD	376	W	0 - 24	-	1	0.	-	
xTU GR. D ND/KPD	376	W	0.1 - 10	-	0.1	1.0	-	
SPEED AT BUS INT.	377	W	LOW ,MED ,HIGH	-	-	LOW	-	
SENSORS PRIORITY 1 of 1	**600**							
PW	601	W	-	-	-	-	-	
PTC TEMP PRI	602	W	0 - 100	%	1	0.	-	
SENSOR 1 TEMP PRI	603	W	0 - 100	%	1	0.	-	
SENSOR 1 HUM PRI	603	W	0 - 100	%	1	0.	-	
SENSOR 2 TEMP PRI	604	W	0 - 100	%	1	0.	-	
SENSOR 2 HUM PRI	604	W	0 - 100	%	1	0.	-	
xTU PEAK TEMP PRI	605	W	0 - 100	%	1	0.	-	
xTU's TEMP PRI	606	W	0 - 100	%	1	100	-	
RESULT TEMP	607	R	-	°C	0.1	-	-	
RESULT HUM	607	R	-	%rH	1	-	-	
CALIBRATION 1 of 2	**240**							
PASSWORD (LEVEL0)	241	W	-	-	-	-	-	
RET TEMP.	243	W	+/- 9.9	°C	0.1	0.	-	
SUP TEMP.	244	W	+/- 9.9	°C	0.1	0.	-	
MODE:	245	W	+/- 9.9	°C	0.1	0.	-	
TU MID: RT	246	W	0 - 99	°C	1	0.	-	
TU MID: UT	246	W	0 - 99	°C	1	0.	-	
CALIBRATION 2 of 2	**250**							
PASSWORD (LEVEL0)	251	W	-	-	-	-	-	
SENSOR 1T	253	W	+/- 9.9	°C	0.1	0.	-	
SENSOR 1H	254	W	+/- 9.9	%rH	0.1	0.	-	
SENSOR 2T	255	W	+/- 9.9	°C	0.1	0.	-	
SENSOR 2H	256	W	+/- 9.9	%rH	0.1	0.	-	
EXT.TEMP.	257	W	+/- 9.9	%rH	0.1	0.	-	
xTU CONNECTIONS	**340**							
PASSWORD (LEVEL0)	341	W	-	-	-	-	-	
xTU SUMMARY	-	W	0 - 24	-	1	24	24	
AUTO IGNORED xTUS	343	W	0 - 23	-	1	0.	0.	
xTU OFF DELAY	344	W	0 - 60	min	1	0.	0.	

Parameter Name	Nr.	Read Write	Flexmatic Range	#REF!	Res.	Init Value	Std. Set.	User Set
xTU SUMMARY	-							
1 : SET	-	W	18.0 - 28.0	°C	0.1	-	-	
1 : FAN	-	W	0 - 100	%	1	-	-	
1 : IG	-	W	NO , YES , AUTO	-	-	AUTO	AUTO	
2 : SET	-	W	18.0 - 28.0	°C	0.1	-	-	
2 : FAN	-	W	0 - 100	%	1	-	-	
2 : IG	-	W	NO , YES , AUTO	-	-	AUTO	AUTO	
3 : SET	-	W	18.0 - 28.0	°C	0.1	-	-	
3 : FAN	-	W	0 - 100	%	1	-	-	
3 : IG	-	W	NO , YES , AUTO	-	-	AUTO	AUTO	
4 : SET	-	W	18.0 - 28.0	°C	0.1	-	-	
4 : FAN	-	W	0 - 100	%	1	-	-	
4 : IG	-	W	NO , YES , AUTO	-	-	AUTO	AUTO	
5 : SET	-	W	18.0 - 28.0	°C	0.1	-	-	
5 : FAN	-	W	0 - 100	%	1	-	-	
5 : IG	-	W	NO , YES , AUTO	-	-	AUTO	AUTO	
6 : SET	-	W	18.0 - 28.0	°C	0.1	-	-	
6 : FAN	-	W	0 - 100	%	1	-	-	
6 : IG	-	W	NO , YES , AUTO	-	-	AUTO	AUTO	
7 : SET	-	W	18.0 - 28.0	°C	0.1	-	-	
7 : FAN	-	W	0 - 100	%	1	-	-	
7 : IG	-	W	NO , YES , AUTO	-	-	AUTO	AUTO	
8 : SET	-	W	18.0 - 28.0	°C	0.1	-	-	
8 : FAN	-	W	0 - 100	%	1	-	-	
8 : IG	-	W	NO , YES , AUTO	-	-	AUTO	AUTO	
9 : SET	-	W	18.0 - 28.0	°C	0.1	-	-	
9 : FAN	-	W	0 - 100	%	1	-	-	
9 : IG	-	W	NO , YES , AUTO	-	-	AUTO	AUTO	
10 : SET	-	W	18.0 - 28.0	°C	0.1	-	-	
10 : FAN	-	W	0 - 100	%	1	-	-	
10 : IG	-	W	NO , YES , AUTO	-	-	AUTO	AUTO	
11 : SET	-	W	18.0 - 28.0	°C	0.1	-	-	
11 : FAN	-	W	0 - 100	%	1	-	-	
11 : IG	-	W	NO , YES , AUTO	-	-	AUTO	AUTO	
12 : SET	-	W	18.0 - 28.0	°C	0.1	-	-	
12 : FAN	-	W	0 - 100	%	1	-	-	
12 : IG	-	W	NO , YES , AUTO	-	-	AUTO	AUTO	
13 : SET	-	W	18.0 - 28.0	°C	0.1	-	-	
13 : FAN	-	W	0 - 100	%	1	-	-	
13 : IG	-	W	NO , YES , AUTO	-	-	AUTO	AUTO	
14 : SET	-	W	18.0 - 28.0	°C	0.1	-	-	
14 : FAN	-	W	0 - 100	%	1	-	-	
14 : IG	-	W	NO , YES , AUTO	-	-	AUTO	AUTO	
15 : SET	-	W	18.0 - 28.0	°C	0.1	-	-	
15 : FAN	-	W	0 - 100	%	1	-	-	
15 : IG	-	W	NO , YES , AUTO	-	-	AUTO	AUTO	
16 : SET	-	W	18.0 - 28.0	°C	0.1	-	-	
16 : FAN	-	W	0 - 100	%	1	-	-	
16 : IG	-	W	NO , YES , AUTO	-	-	AUTO	AUTO	
17 : SET	-	W	18.0 - 28.0	°C	0.1	-	-	
17 : FAN	-	W	0 - 100	%	1	-	-	
17 : IG	-	W	NO , YES , AUTO	-	-	AUTO	AUTO	
18 : SET	-	W	18.0 - 28.0	°C	0.1	-	-	
18 : FAN	-	W	0 - 100	%	1	-	-	
18 : IG	-	W	NO , YES , AUTO	-	-	AUTO	AUTO	
19 : SET	-	W	18.0 - 28.0	°C	0.1	-	-	
19 : FAN	-	W	0 - 100	%	1	-	-	
19 : IG	-	W	NO , YES , AUTO	-	-	AUTO	AUTO	

Parameter Name	Nr.	Read Write	Flexmatic Range		Res.	Init Value	Std. Set.	User Set
20 : SET	-	W	18.0 - 28.0	°C	0.1	-	-	
20 : FAN	-	W	0 - 100	%	1	-	-	
20 : IG	-	W	NO , YES , AUTO	-	-	AUTO	AUTO	
21 : SET	-	W	18.0 - 28.0	°C	0.1	-	-	
21 : FAN	-	W	0 - 100	%	1	-	-	
21 : IG	-	W	NO , YES , AUTO	-	-	AUTO	AUTO	
22 : SET	-	W	18.0 - 28.0	°C	0.1	-	-	
22 : FAN	-	W	0 - 100	%	1	-	-	
22 : IG	-	W	NO , YES , AUTO	-	-	AUTO	AUTO	
23 : SET	-	W	18.0 - 28.0	°C	0.1	-	-	
23 : FAN	-	W	0 - 100	%	1	-	-	
23 : IG	-	W	NO , YES , AUTO	-	-	AUTO	AUTO	
24 : SET	-	W	18.0 - 28.0	°C	0.1	-	-	
24 : FAN	-	W	0 - 100	%	1	-	-	
24 : IG	-	W	NO , YES , AUTO	-	-	AUTO	AUTO	
xTU STATUS								
ADR / MOD	-	W	1 - 24	-	-	-	-	
ADR / MOD	-	W	NO , READ , SET	-	-	-	-	
DM:	-	W	YES , NO	-	-	-	-	
STB:	-	W	ON , OFF	-	-	-	-	
SYS:	-	W	ON , OFF	-	-	-	-	
DAM:	-	R	ON , OFF	-	-	-	-	
HEA:	-	R	ON , OFF	-	-	-	-	
TU CONFIGURATION								
MODE:	-	W	NO , READ , SET	-	-	-	-	
MA ID:	-	W	1 - 24	-	1	-	-	
SL ID:	-	W	0 - 7	-	1	-	-	
FAN L:	-	W	D, N, Y	-	-	-	-	
M TYP:	-	W	O, U	-	-	-	-	
SET S:	-	W	0 - 4	-	1	-	-	
HTR D:	-	W	0 - 32	min	1	-	-	
RT OF:	-	W	0 - 99	-	1	-	-	
UT OF:	-	W	0 - 99	-	1	-	-	
FA OF:	-	W	1 - 9	-	1	-	-	
FAN R:	-	W	0 - 58	-	1	-	-	
BLACK:	-	W	YES , NO	-	-	-	-	
R.INT:	-	W	0 - 60	-	1	-	-	
C.TIM:	-	W	0 - 200	-	1	-	-	

3.3 Messages / Warnings / Alarms

GENERAL ALARM	RESET, ACKNOWLEDGE	
nu		
nu		
nu		
nu		
ELECTRICAL HEATERS OVERHEATED	WARNING	
FAN FAILURE	WARNING	Warning only, stops humidifier + el. Heaters
FAN FAILURE	ALARM	Stops the whole unit
CLOGGED FILTERS	WARNING	
WATER LEAKAGE	WARNING	Warning only
WATER LEAKAGE	ALARM	Stops the whole unit
USER INPUT 1 TRIGGERED	WARNING	Warning only
USER INPUT 1 TRIGGERED	ALARM	Stops the whole unit
HUMIDIFIER FAILURE	WARNING	
HUMIDIFIER HIGH CURRENT	WARNING	
HUMIDIFIER FAILURE	WARNING	
HUMIDIFIER FAILURE	WARNING	
HUMIDIFIER CYLINDER WORN	WARNING	
HIGH ZONE TEMPERATURE	WARNING	30 minutes delayed after start
LOW ZONE TEMPERATURE	WARNING	30 minutes delayed after start
HIGH ZONE HUMIDITY	WARNING	30 minutes delayed after start
LOW ZONE HUMIDITY	WARNING	30 minutes delayed after start
HIGH SUPPLY TEMPERATURE	WARNING	30 minutes delayed after start
LOW SUPPLY TEMPERATURE	WARNING	30 minutes delayed after start
nu		
nu		
CONDITIONER WORKING HOURS EXCEEDED	WARNING	
nu		
HUMIDIFIER WORKING HOURS EXCEEDED	WARNING	
PTC SENSOR FAILURE	WARNING	
ROOM SENSOR FAILURE	WARNING	Warning only
ROOM SENSOR FAILURE	ALARM	Stops the whole unit
T+H SENSOR 2 FAILURE	WARNING	
WATER PRESENCE SENSOR FAILURE	WARNING	
NETWORK FAILURE	WARNING	Double Flexbus addresses (Sensors)
OUT OF MEMORY	WARNING	Hardware defective
UNIT ON	MESSAGE	
UNIT OFF	MESSAGE	
TIMER MODE	MESSAGE	
STANDBY MODE	MESSAGE	
POWER ON UNIT LOGIN	MESSAGE	
POWER OFF	MESSAGE	
Unit 1 disconnected	WARNING	Flexbus connection missing
Unit 2 disconnected	WARNING	Flexbus connection missing
Unit 3 disconnected	WARNING	Flexbus connection missing
Unit 4 disconnected	WARNING	Flexbus connection missing
Unit 5 disconnected	WARNING	Flexbus connection missing
Unit 6 disconnected	WARNING	Flexbus connection missing
Unit 7 disconnected	WARNING	Flexbus connection missing

49	Unit 8 disconnected	WARNING	Flexbus connection missing
50	Unit 9 disconnected	WARNING	Flexbus connection missing
51	Unit 10 disconnected	WARNING	Flexbus connection missing
52	Unit 11 disconnected	WARNING	Flexbus connection missing
53	Unit 12 disconnected	WARNING	Flexbus connection missing
54	Unit 13 disconnected	WARNING	Flexbus connection missing
55	Unit 14 disconnected	WARNING	Flexbus connection missing
56	Unit 15 disconnected	WARNING	Flexbus connection missing
57	Unit 16 disconnected	WARNING	Flexbus connection missing
58	nu		
59	nu		
60	nu		
61	OUTDOOR TEMP. SENSOR FAILURE	WARNING	
62	nu		
63	nu		
64	ON-OFF BY FLEXMATIC NOT ENABLED	MESSAGE	
65	nu		
66	nu		
67	nu		
68	USER INPUT 2 TRIGGERED	WARNING	
69	USER INPUT 2 TRIGGERED	ALARM	
70	NO CONNECTION TO UNIT 1	WARNING	unit #1 not reachable from other units
71	nu		
72	nu		
73	FIRE ALARM	ALARM	
74	OUT OF MEMORY	WARNING	Flexmatic memory overflow.
75	nu		
76	nu		
77	NETWORK PING	WARNING	Flexbus error. 2 sensors with same address.
78	nu		
79	nu		
80	nu		
81	nu		
82	nu		
83	nu		
84	nu		
85	UNIT SYNCHRONISATION	MESSAGE	unit comes back to the Flexbus network happens after power off)
86	nu		
87	nu		
88	nu		
89	nu		
90	AIRFLOW DEVICE NOT READY, PLS. CHECK	WARNING	no reaction of airflow device during selfsetting of threshold.
91	CW WORKING HOURS EXCEEDED	WARNING	
92	HW WORKING HOURS EXCEEDED	WARNING	
93	HEATER 1 WORKING HOURS EXCEEDED	WARNING	
94	HEATER 2 WORKING HOURS EXCEEDED	WARNING	
95	DEHUMIDIFICATION WORKING HOURS EXCEEDED	WARNING	
96	nu		
97	nu		
98	LOC OFF	MESSAGE	not used
99	REM OFF	MESSAGE	switched off from remote or from unit switch
100	nu		
101	nu		
102	TIMER OFF	MESSAGE	
103	BMS OFF	MESSAGE	
104	RECOVERY	MESSAGE	
105	MANUAL	MESSAGE	
106	OVERRIDE	MESSAGE	
107	SETBACK	MESSAGE	

Section Four - Connections

4.0 Connection Guide

The following gives Information about the Inputs and Outputs of the Flexface. It is not an electrical drawing, but general information about how the Inputs and Outputs have to be used. For detailed information please refer to the electric diagram of the unit.

Inputs

Inputs	Description	Function
PTC 0	Remote On/Off Fire Alarm (2400 Ω)	0Ω = Remote On 2400Ω = Fire Alarm ∞ Ω = Remote Off
PTC 1	User Input 1	1 = Ok, 0 = UI active
PTC 2	Clogged Filter	1 = Ok, 0 = Clogged Filter
PTC 3	Local Override Electrical Heaters Overheated	3300Ω = Normal operation 0Ω = Override (Push Button) 2300Ω = El. Heaters overheated
PTC 4	Changeover Cycle Recovery Mode	3300Ω = No HW, no Rec.M. 2300Ω = HW OK, no Rec.M. 2800Ω = No HW, Rec.M. on 1800Ω = HW OK, Rec.M. on
PTC 5	Outdoor Sensor	
PTC 6	Room Sensor / Return Sensor	
PTC 7	Supply Air Sensor	
ANA In 0	Airflow Sensor 0-10V / Airflow Pressure switch On/Off / Pressure Control 0-10V	
ANA In 1	LSI / User Input 2	
ANA In 2	Water Leakage Detector	

Outputs

Outputs	Description	Function
Out 0	Warning	
Out 1	Open Chilled water Valve (changes to Heater 1 if 0-10V CW Output was selected on PWM 0)	
Out 2	Close Chilled Water Valve (changes to Heater 1 if 0-10V CW Output was selected on PWM 0)	
Out 3	Open Hot Water Valve	
Out 4	Close Hot Water Valve	
Out 5	Fill Humidifier	
Out 6	Drain Humidifier	
Out 7	Alarm	
Out 8	Fan	
Out 9	Humidifier (on I-Module)	
PWM 0	Alarm Board or Heater Board or CW Valve	
PWM 1	Fanspeed	

Power supply and PTC temperature sensors

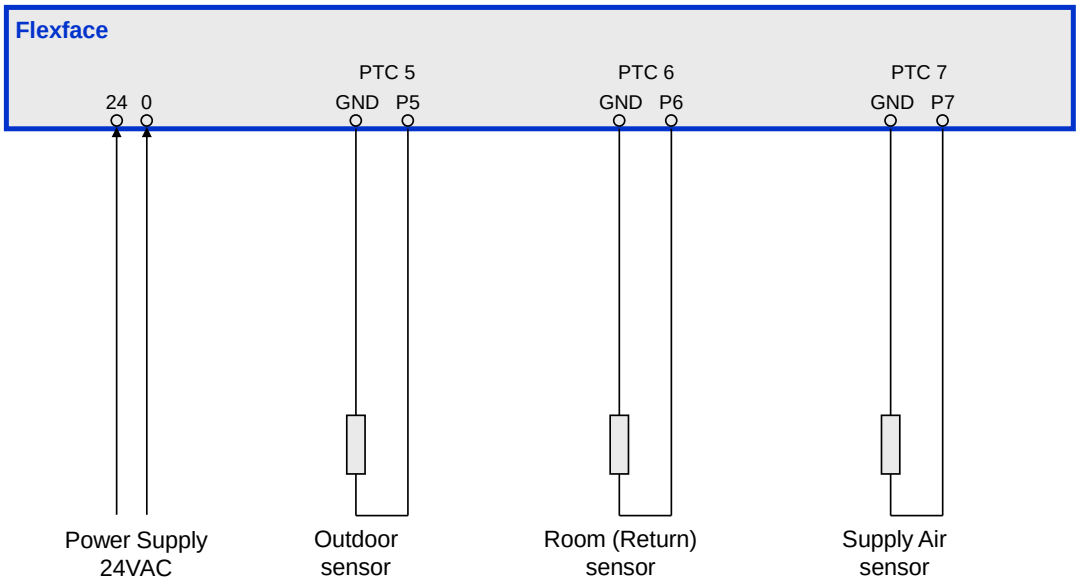

Warning, Alarm, fan output

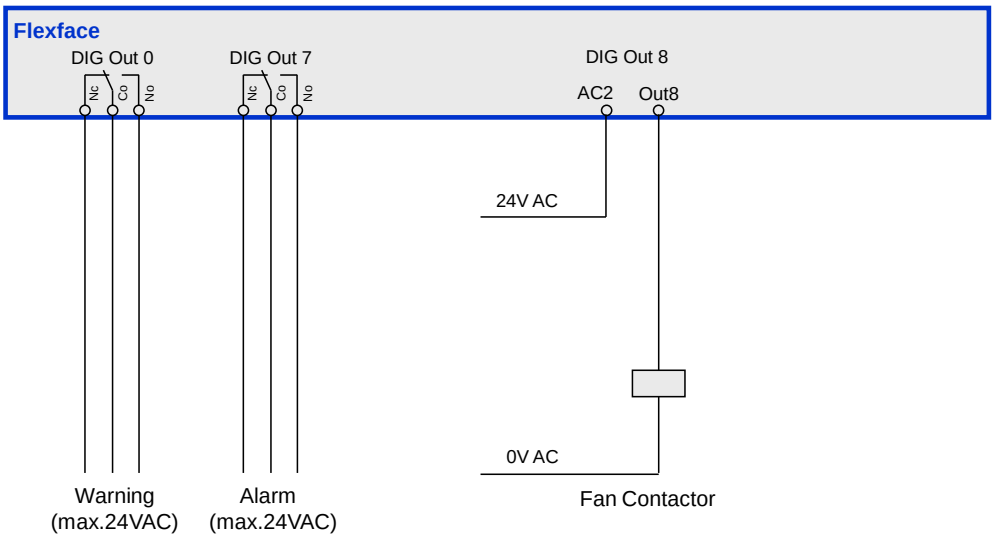

Chilled water + hot water actuator + el. heater alternative

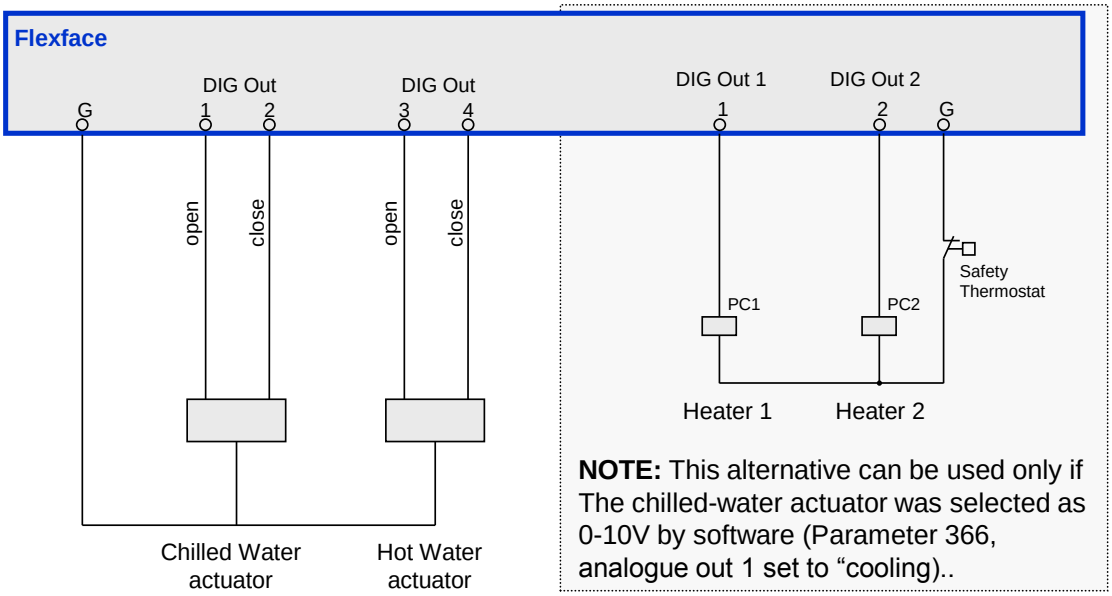

NOTE: This alternative can be used only if The chilled-water actuator was selected as 0-10V by software (Parameter 366, analogue out 1 set to “cooling)..

Analogue outputs

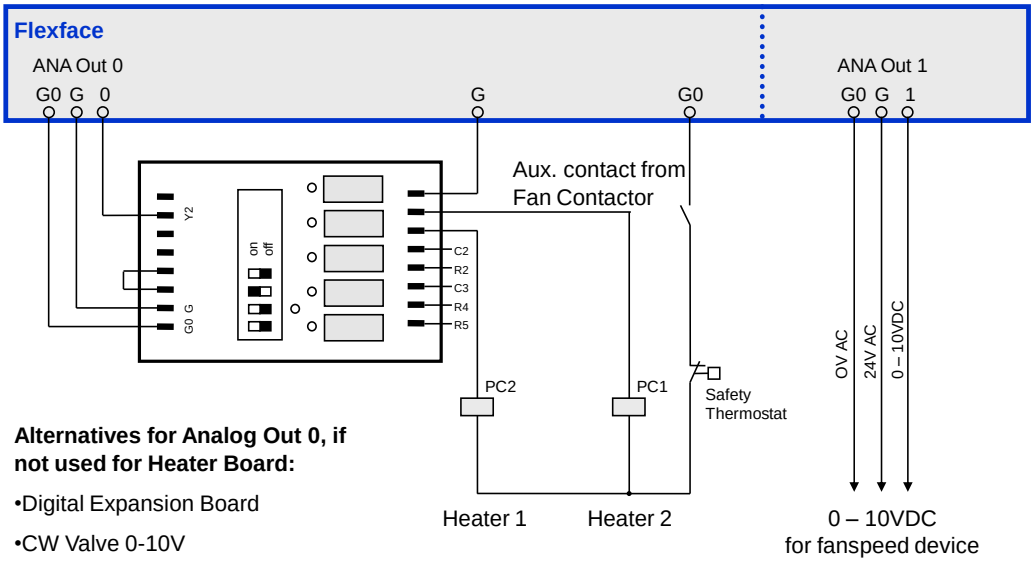

Alternatives for Analog Out 0, if not used for Heater Board:

- Digital Expansion Board
- CW Valve 0-10V

Humidifier control

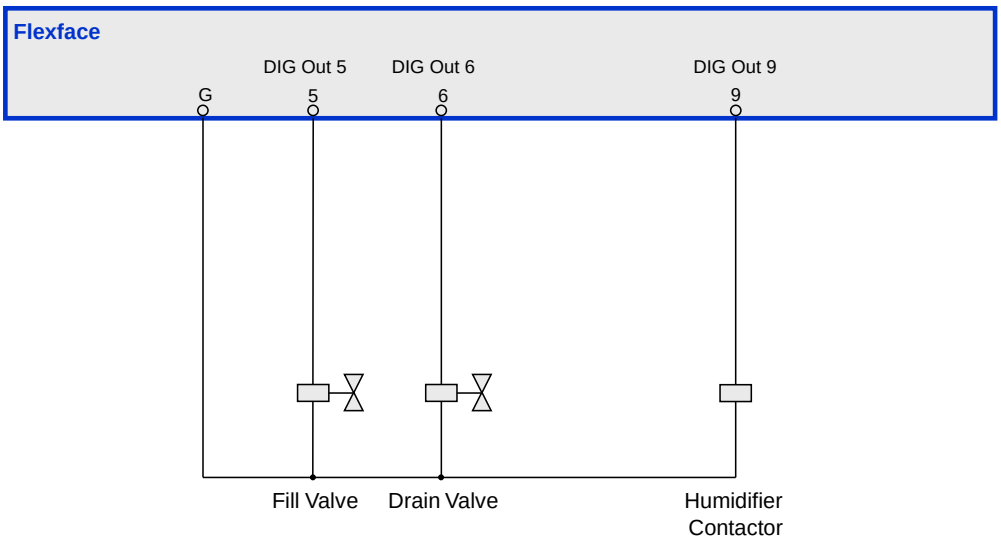

Digital inputs (1)

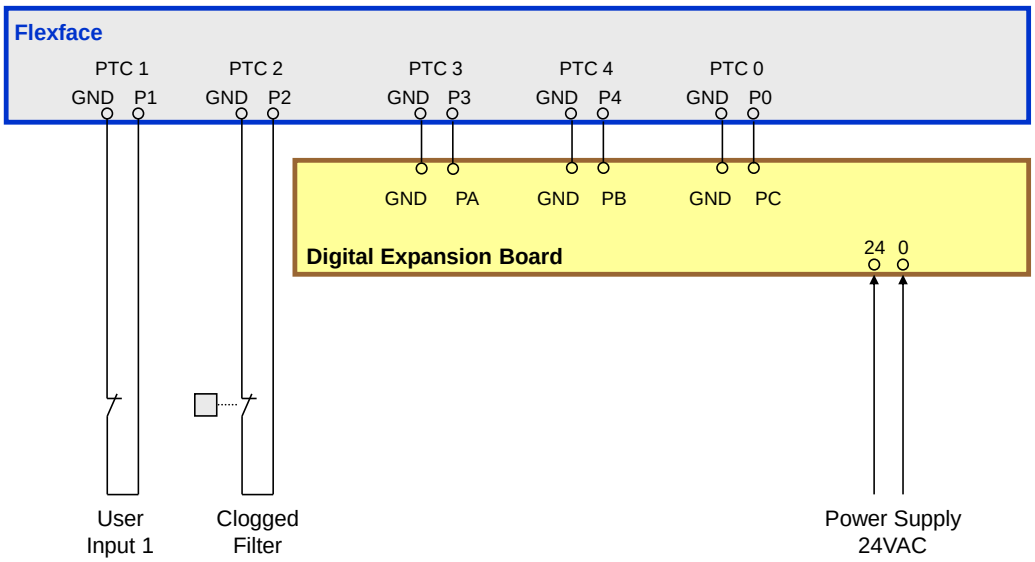

Digital inputs (2)

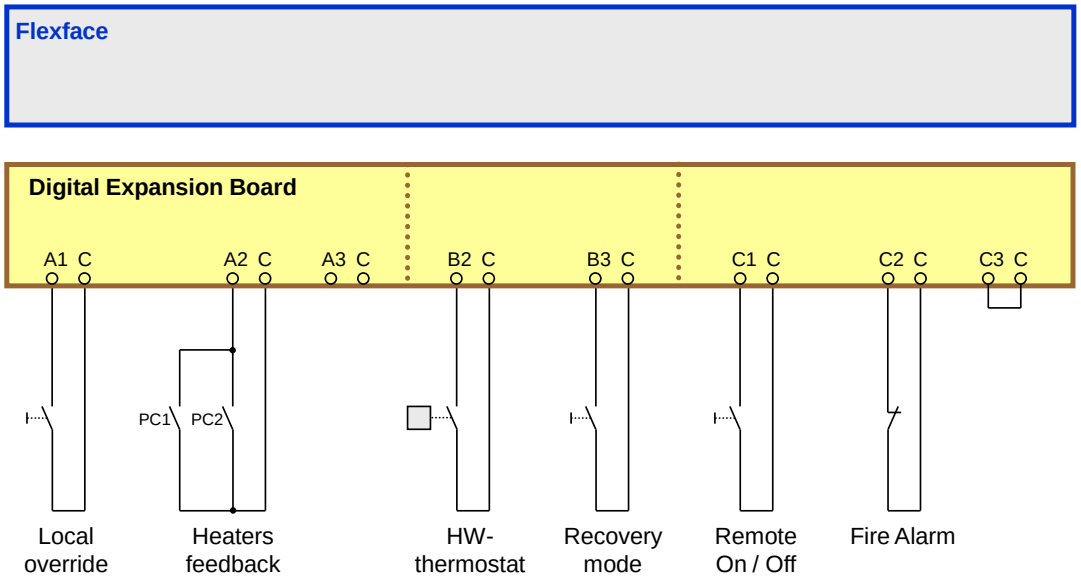

Airflow device, user input 2 and LWD

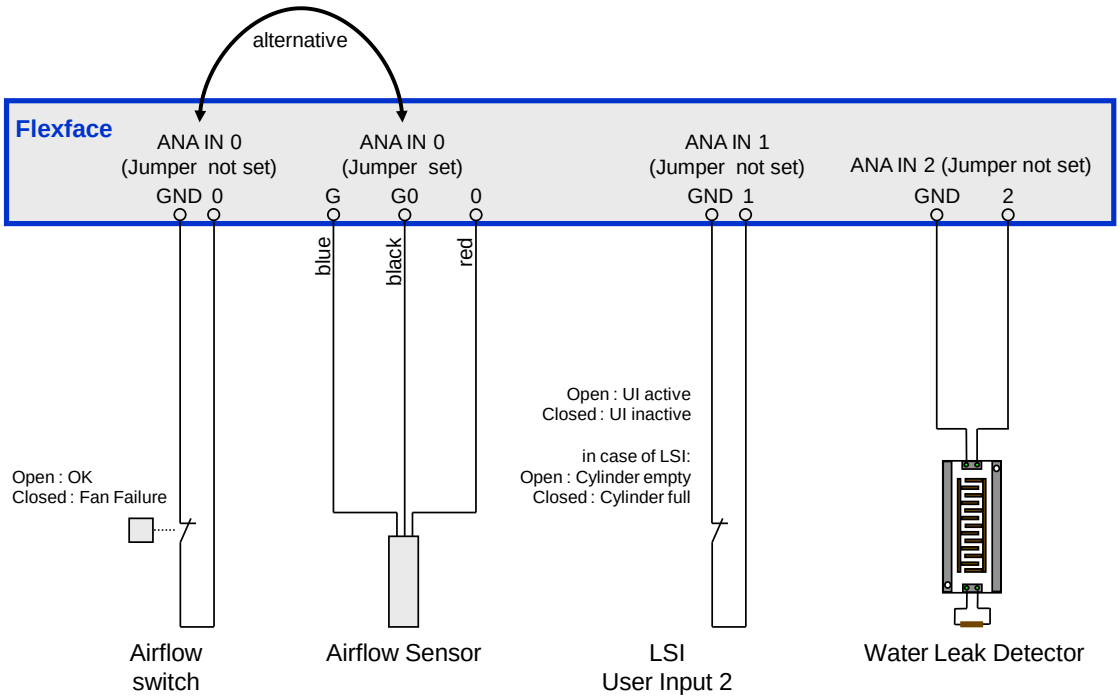

t Tel: +44 (0) 1342 310400
f Fax: +44 (0) 1342 310401
e aet@flexiblespace.com

Distributed in the UK by

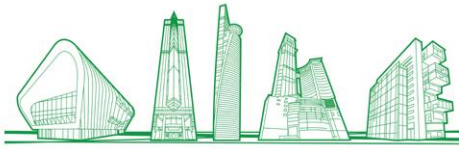

Advanced Ergonomic Technologies Ltd, The Center, 201-203 London Road, East Grinstead, West Sussex, RH19 1HA

Registered in England. Company No. 2874101